ANGELO PO - FORNO COMBINATO GAS 10 x 1/1 GN LIVELLO 2
FX10G2CR - 01-03-2011 » 24-05-2011

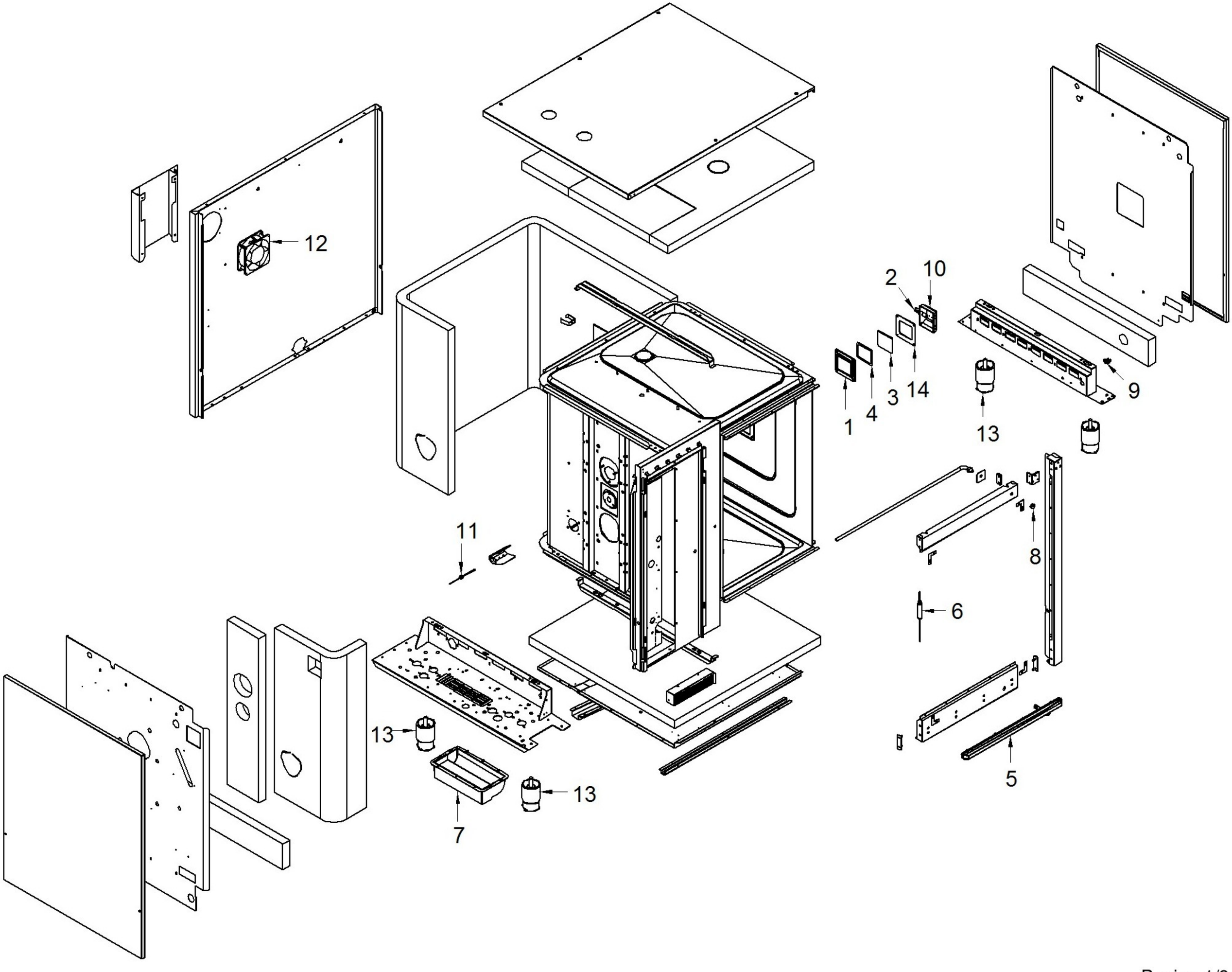

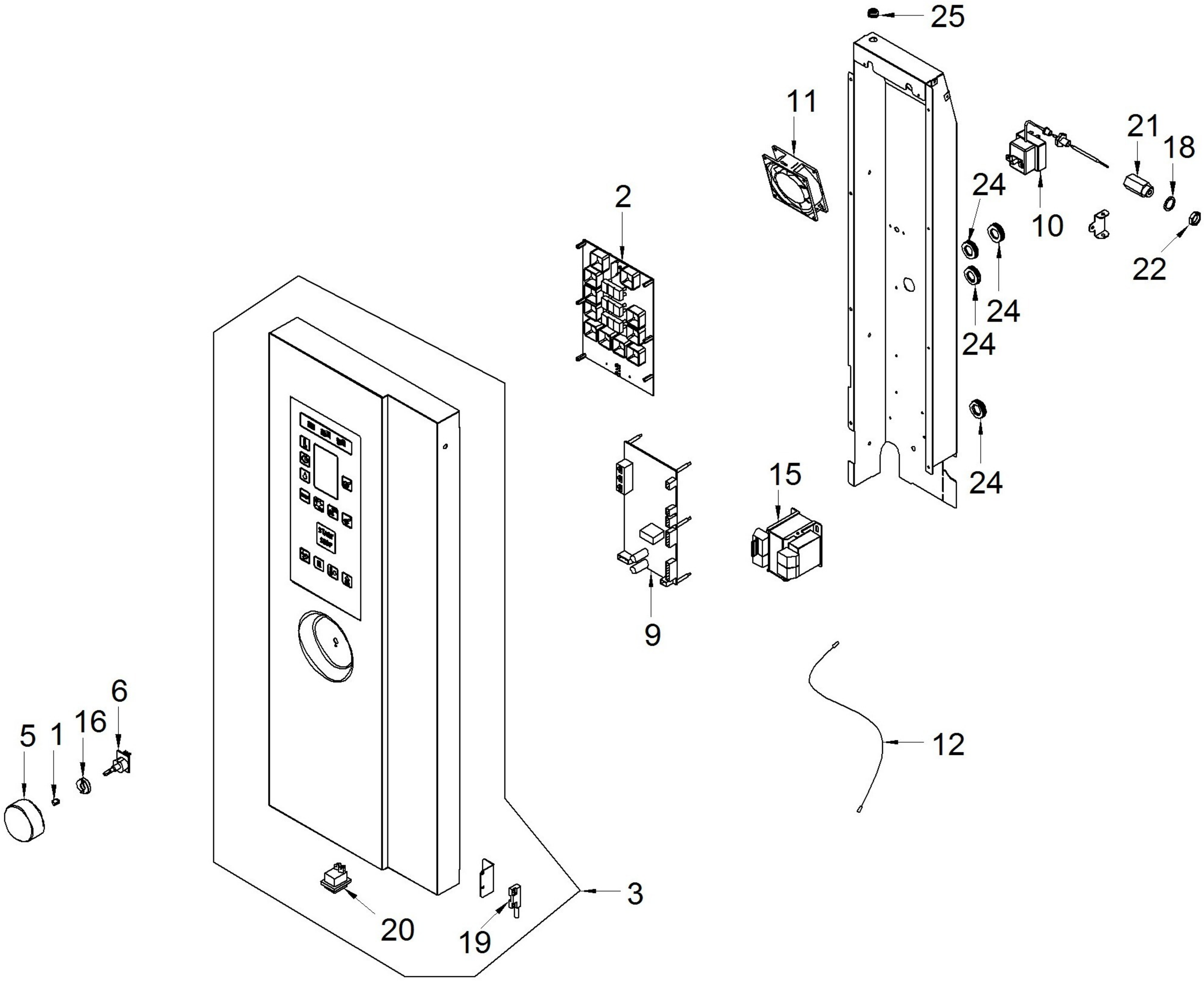
25
11
21
18
24
10
2
22
24
24
24
15
9
6
5
1
16
12
3
20
19

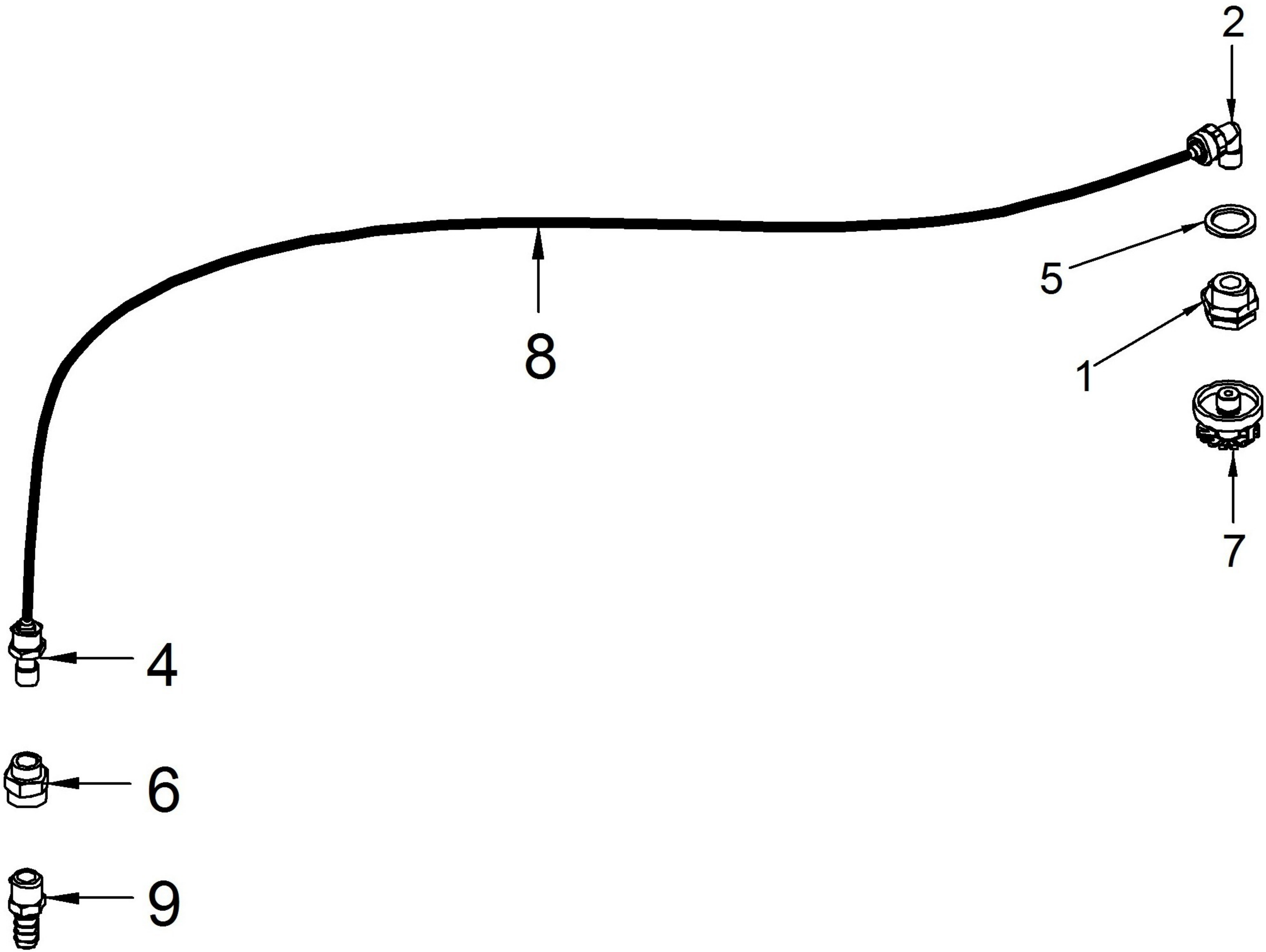
2
5
8
1
7
4
6
9

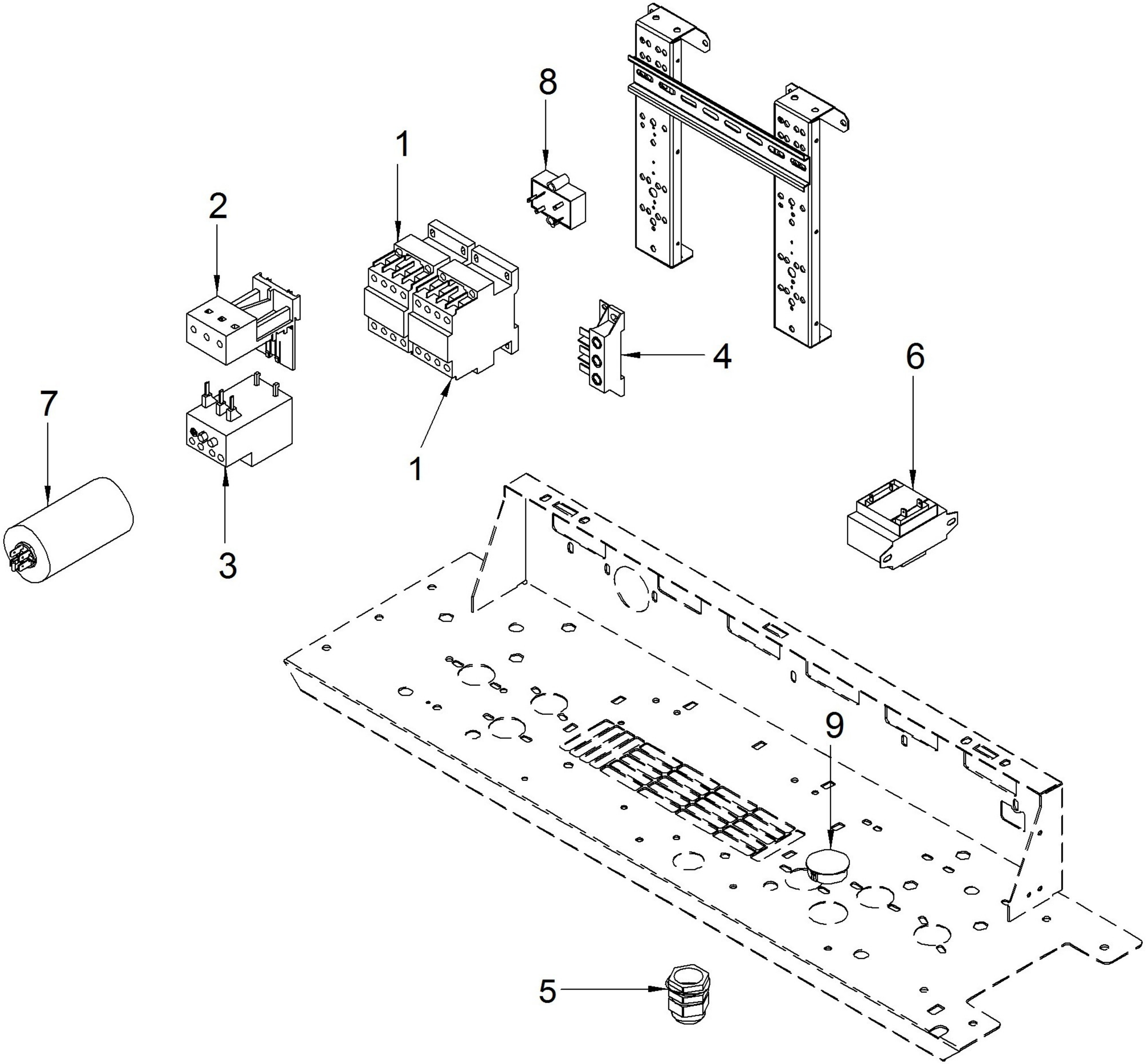
8
1
2
4
6
7
1
3
9
5

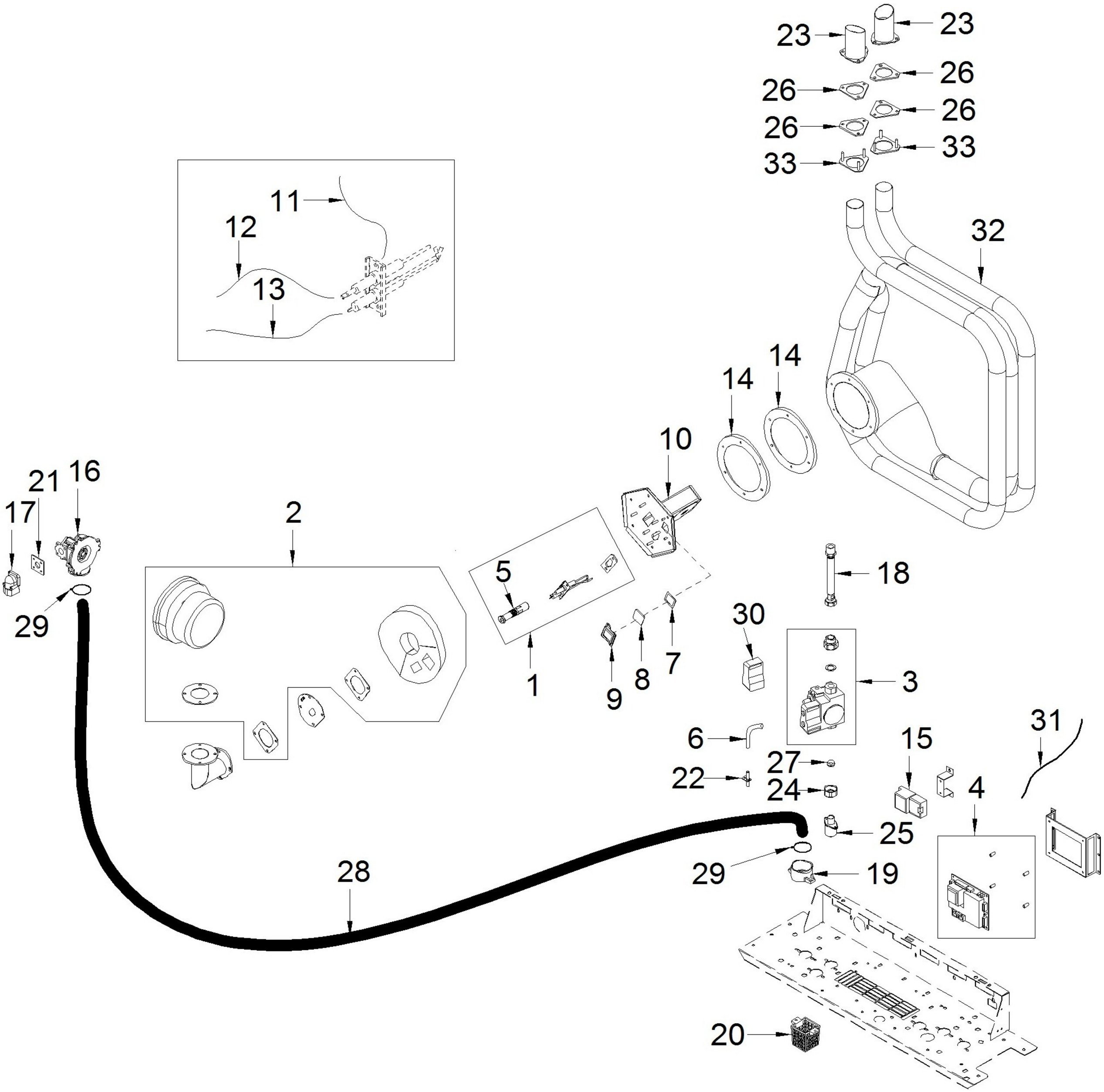
23
23
26
26
26
26
33
33
11
12
13
32
14
14
10
21
16
17
2
5
18
29
30
1
9
8
7
3
6
15
31
27
22
24
4
25
28
29
19
20

ANGELO PO - FORNO COMBINATO GAS 10 x 1/1 GN LIVELLO 2
FX10G2CR - K002200-M.ALIM.ACQUA-SCARICO - 01-03-2011 » 24-05-2011

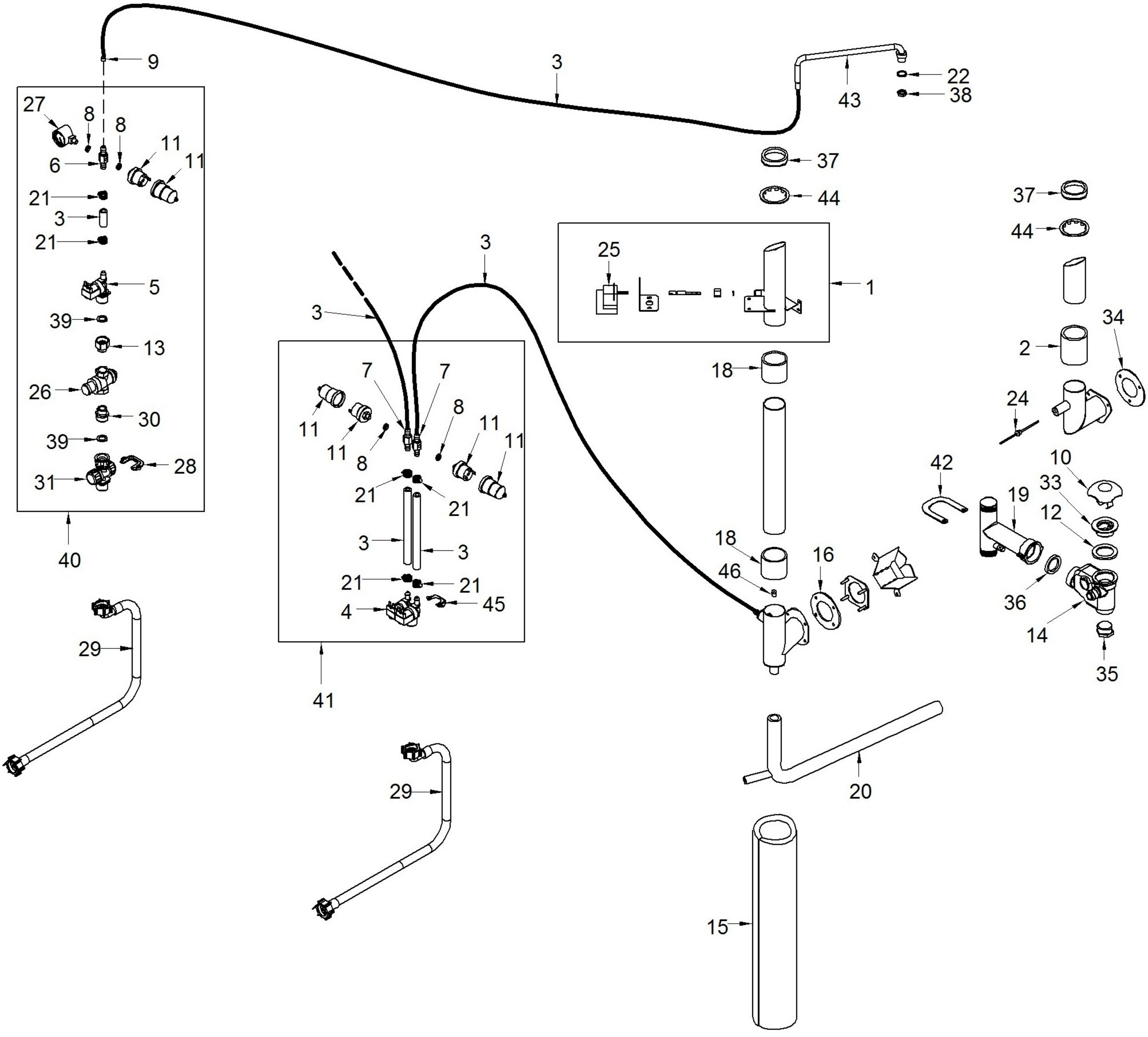

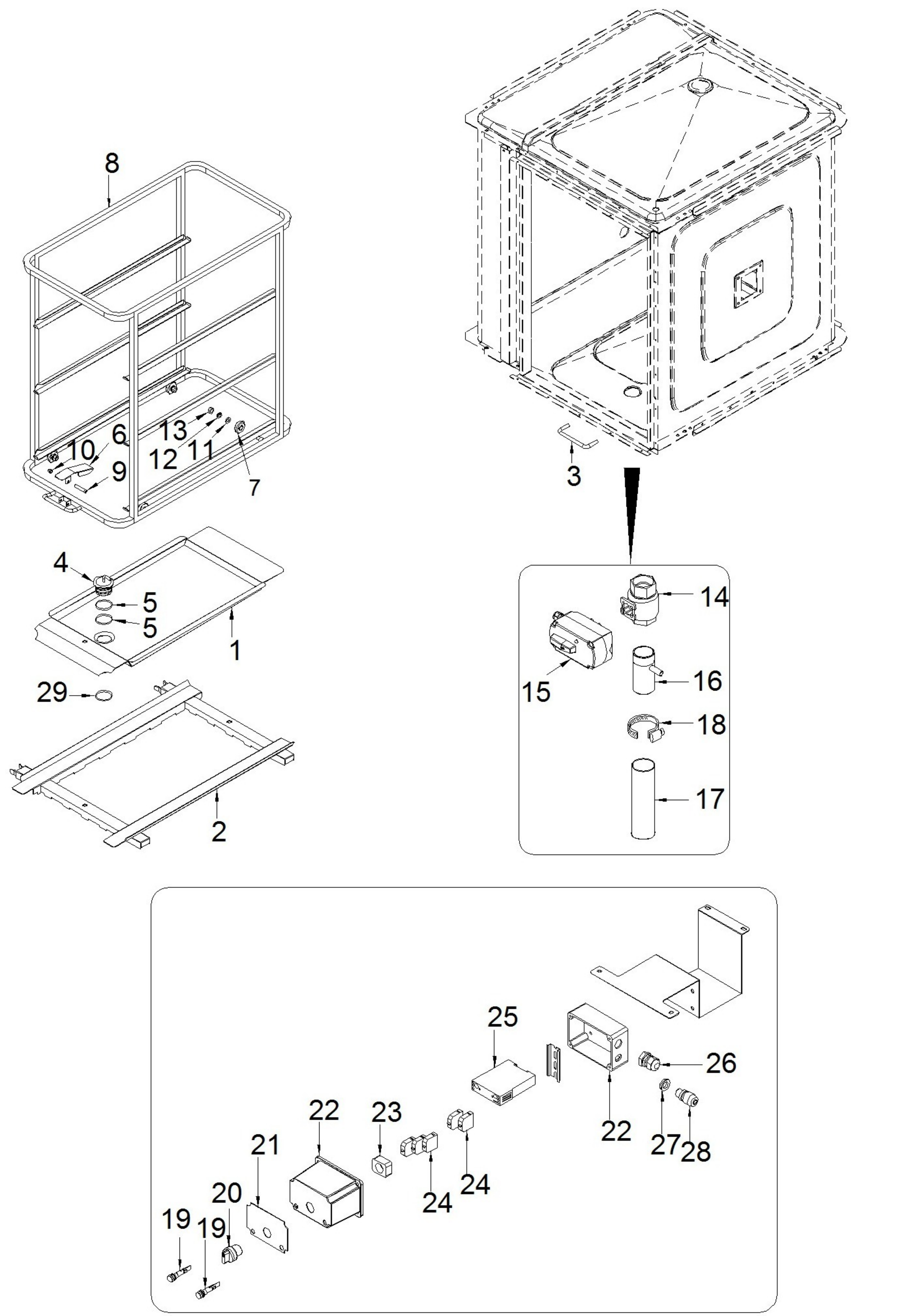
8
6
10
9
13
12
11
7
3
4
5
5
1
29
2
14
15
16
18
17
25
26
22
23
21
22
27
28
24
24
20
19
19

ANGELO PO - FORNO COMBINATO GAS 10 x 1/1 GN LIVELLO 2
FX10G2CR - K002980-GRUPPO PORTA - 01-03-2011 » 24-05-2011

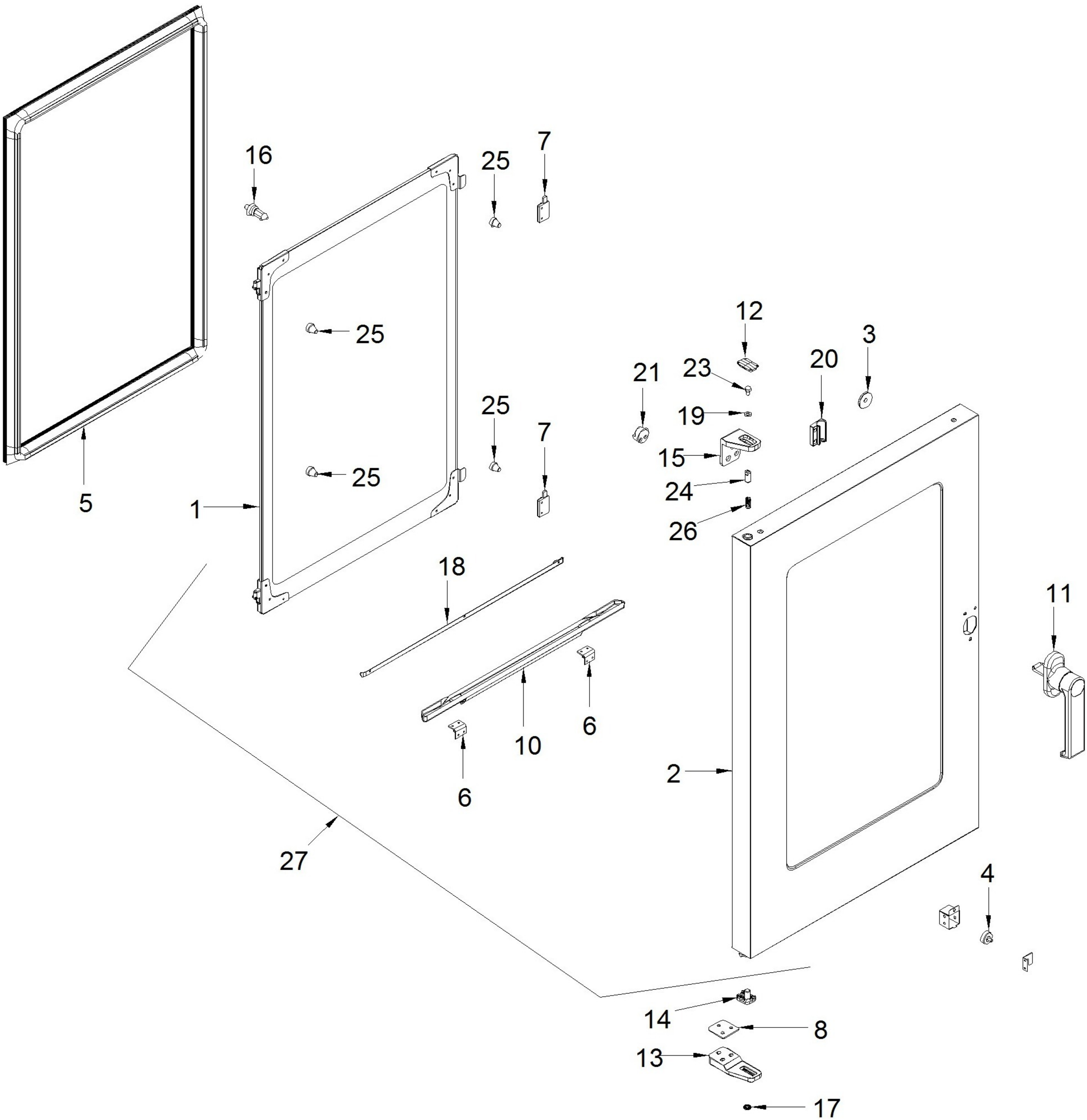

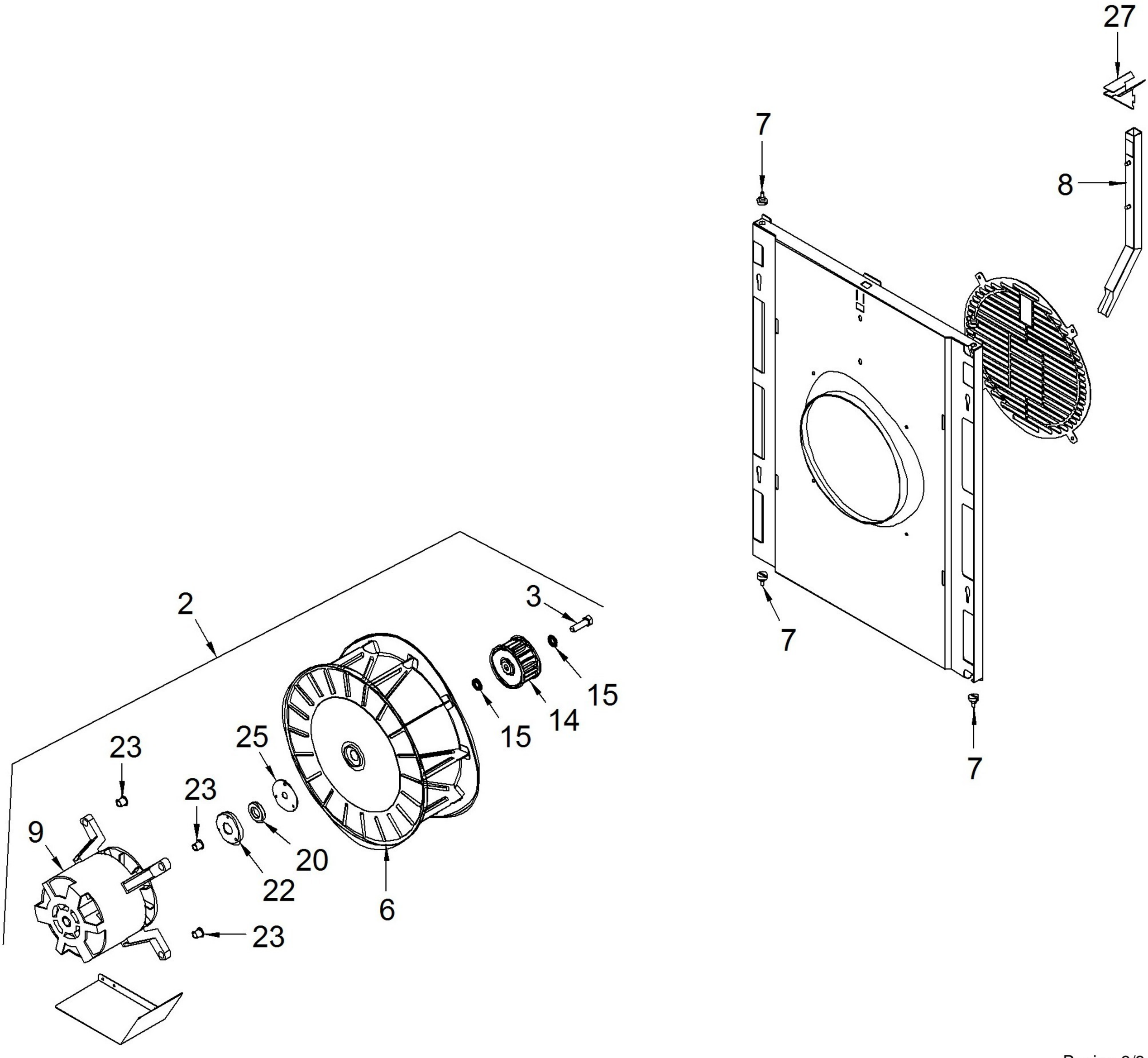
27
7
8
7
7
2
3
15
14
15
25
23
23
9
20
22
6
23