FRY-TOP A GAS Serie 700

MODELLO CON RUBINETTO
MODELLO CON VALVOLA

TIPO: 7FT/G400, 7FTT/G400, 7FTT/G405, 7FT/G410, 7FTT/G410, 7FTT/G415, 7FT/G800, 7FTT/G800, 7FTT/G805, 7FT/G810, 7FTT/G810, 7FTT/G815, 7FT/G820, 7FTT/G820, 7FTT/G825, 7FTV/G400, 7FTTV/G400, 7FTTV/G405, 7FTV/G410, 7FTTV/G410, 7FTTV/G415, 7FTV/G800, 7FTTV/G800, 7FTTV/G800, 7FTTV/G805, 7FTV/G810, 7FTTV/G810, 7FTTV/G815, 7FTV/G820, 7FTTV/G820, 7FTTV/G825, 7FTTF/G800, 7FTTF/GE800, 7FTTF/G820, 7FTTF/GE820, 7FTTF/G805, 7FTTF/GE805, 7FTTF/G825, 7FTTF/GE825

Ricambi

S/N: Valido da:08. 02. 2008 Rev.: 1.1

9. Parti di ricambio

Parti esterne e rubinetto 64

Valvola e termostato di sicurezza 68

Bruciatore e pilota 72

9.1 Codici di voltaggio

Voltaggio	Codice di voltaggio
A	3/N/PE~400/230V 50Hz
B	~250V 16A 50Hz
C	3/N/PE~380/220V 50Hz
D	3/PE~200V 50-60Hz
F	2/PE 220–240V 50Hz
G	3/N/PE~415/240V 50Hz
H	3/PE~230V 50Hz
I	3/PE~220V 60Hz
J	3/PE~380 50Hz
K	3/PE~400V 50Hz
L	3/PE~415V 50Hz
M	3/PE~440V 60Hz
N	3/PE~460V 60Hz
O	3/PE~480V 60Hz
P	1/N/PE~220-240V 50Hz
R	2/PE~220-230V 60Hz
S	3/N/PE~400/230V 50Hz
T	3/PE~230V 60Hz
U	1/N/PE~100V 50-60Hz

9.2 Codici dei prodotti

Codici del prodotto	Nome completo
Codici dei modelli	
RUB	MODELLO CON RUBINETTO
VAL	MODELLO CON VALVOLA
Codici dei tipi	
7FT400	79FT/G400
7FTT400	7FTT/G400
7FTT405	7FTT/G405
7FT410	7FT/G410
7FTT410	7FTT/G410
7FTT415	7FTT/G415
7FT800	7FT/G800
7FTT800	7FTT/G800
7FTT805	7FTT/G805
7FT810	7FT/G810
7FTT810	7FTT/G810
7FTT815	7FTT/G815
7FT820	7FT/G820
7FTT820	7FTT/G820
7FTT825	7FTT/G825

Codici del prodotto	Nome completo
7FTV400	7FTV/G400
7FTTV400	7FTTV/G400
7FTTV405	7FTTV/G405
7FTV410	7FTV/G410
7FTTV410	7FTTV/G410
7FTTV415	7FTTV/G415
7FTV800	7FTV/G800
7FTV800	7FTTV/G800
7FTTV800	7FTTV/G800
7FTTV805	7FTTV/G805
7FTV810	7FTV/G810
7FTTV810	7FTTV/G810
7FTTV815	7FTTV/G815
7FTV820	7FTTV/G820
7FTTV820	7FTTV/G820
7FTTV820	7FTTV/G825
7FTTF800	7FTTF/G800
7FTTFE800	7FTTF/GE800
7FTTF820	7FTTF/G820
7FTTFE820	7FTTF/GE820
7FTTF805	7FTTF/G805
7FTTFE805	7FTTF/GE805
7FTTF/G825	7FTTF/G825
7FTTFE825	7FTTF/GE825
Codici degli accessori	

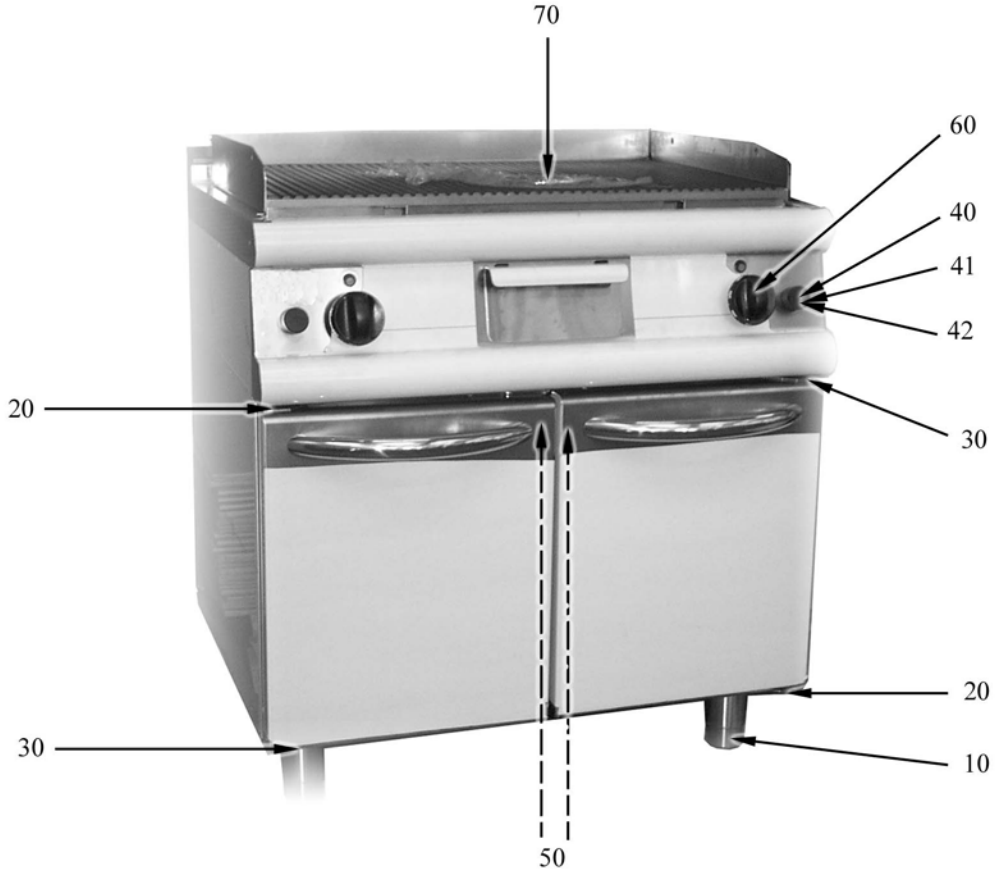
70
60
40
41
42
20
30
20
30
10
50

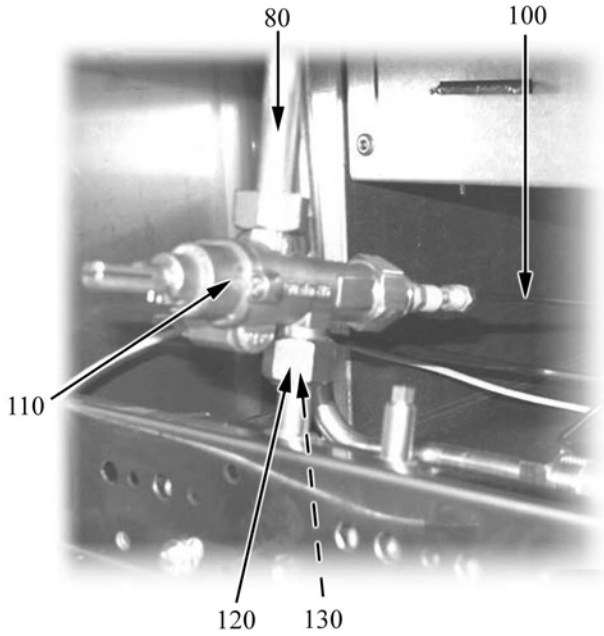
80
100
110
120
130

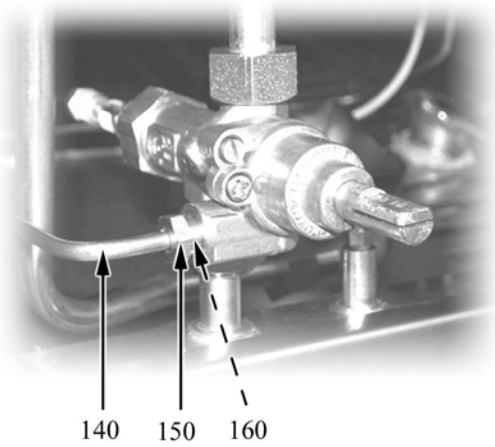
140
150
160

ID	Modello	Tipo	Voltaggio	Descrizione	Codici del produttore
Module: Parti esterne e rubinetto					
10				Piedino	826490142
20				Cerniera inferiore destra superiore sinistra porta	826410020
30				Cerniera inferiore sinistra superiore destra porta	826410010
40				Accensione piezoelettrica	6A041105
41				Rondella	822160540
42				Cappuccio	826630420
50				Magnete	826900011
60	RUB			Manopola cucina gas nera	824710100
70	VAL	7FTT825,7FTTFE825		Piastra	41826470100
70	VAL	7FTT805,7FTTV805,7FTTF805, 7FTTF805,7FTTFE805		Piastra	41826470060
70	VAL	7FTT405,7FTTV405		Piastra	41826470070
70		7FT800,7FTV800,7FTV800		Piastra	41826470170
70		7FT400,7FTV400		Piastra	41826470180
70		7FT410,7FTV410		Piastra	41826470210
70		7FT820,7FTV820		Piastra	41826470220
70		7FT810,7FTV810		Piastra	41826470560
70	VAL	7FTT415,7FTTV415		Piastra	41826470550
70	VAL	7FTT815,7FTTV815		Piastra	826470600
80	RUB			Conduttura destra	823560511
80	RUB			Conduttura destra Gas Città	2515176
80	RUB			Conduttura sinistra	823560213
90	RUB			Raccordo	6A013401
100	RUB			Termocoppia	826920080
110	RUB			Rubinetto	6A011490
110	RUB			Rubinetto Gas Città	6A011490
120	RUB			Dado	6A011850
130	RUB			Bicono	6A011480
140	RUB			Conduttura	41823560500

RUB= MODELLO CON RUBINETTO, VAL=MODELLO CON VALVOLA

7FT400=7FT/G400, 7FTT400=7FTT/G400, 7FTT405=7FTT/G405, 79FT410=7FT/G410, 7FTT410=7FTT/G410, 7FTT415=7FTT/G415, 7FT800=7FT/G800, 7FTT800=7FTT/G800, 7FTT805=7FTT/G805, 7FT810=7FT/G810, 7FTT810=7FTT/G810, 7FTT815=7FTT/G815, 7FT820=7FT/G820, 7TT820=7FTT/G820, 7FTT825=7FTT/G825, 7FTV400=7FTV/G400, 7FTTV400=7FTTV/G400, 7FTTV405=7FTTV/G405, 7FTV410=7FTV/G410, 7FTTV410=7FTTV/G410, 7FTTV415= 7FTTV/G415, 7FTTV800=7FTTV/G800, 7FTTV805=7FTTV/G805, 7FTV810=7FTV/G810, 7FTTV810= 7FTTV/G810, 7FTTV815=7FTTV/G815, 7FTV820=7FTV/G820, 7FTTF800=7FTTF/G800, 7FTTFE800=7FTTF/GE800, 7FTTF820=7FTTF/G820, 7FTTFE820=7FTTF/GE820, 7TTFE805=7FTTF/GE805, 7FTTFE825=7FTTF/GE825

A=3/N/PE~400/230V 50Hz

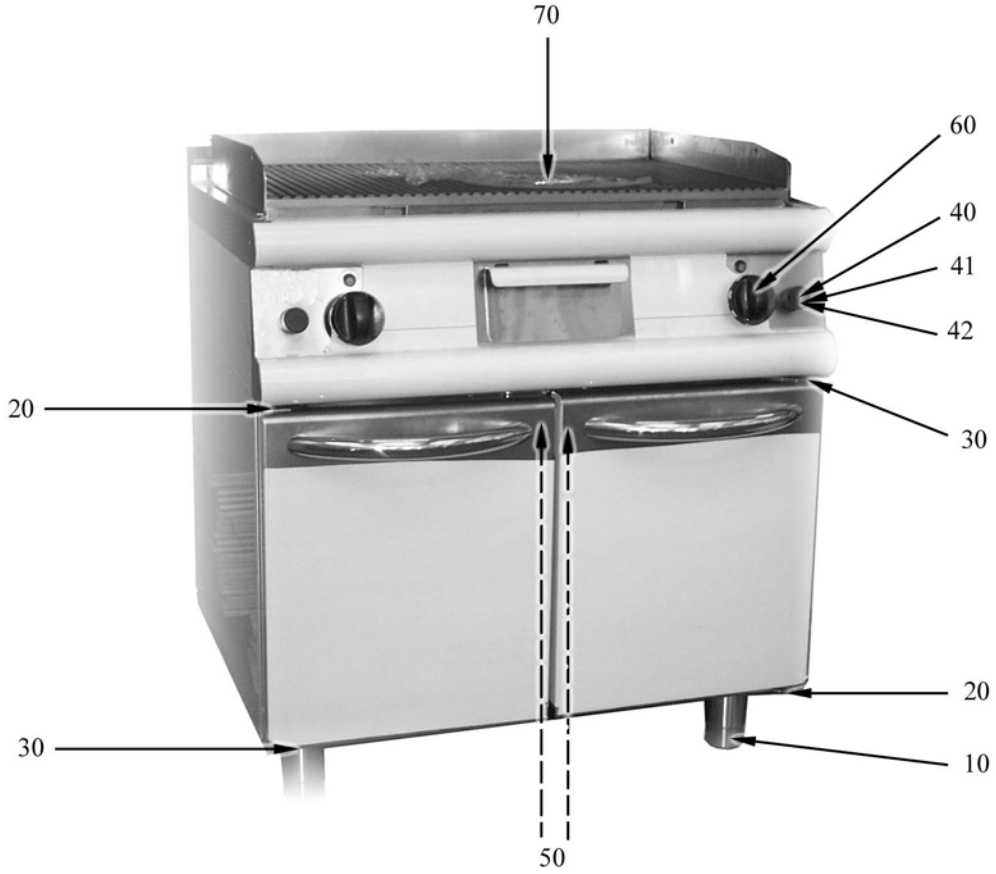
70
60
40
41
42
20
30
20
30
10
50

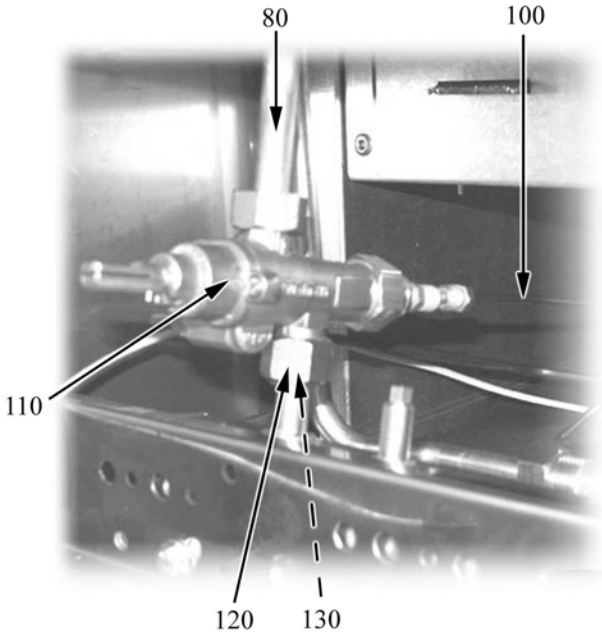
80
100
110
120
130

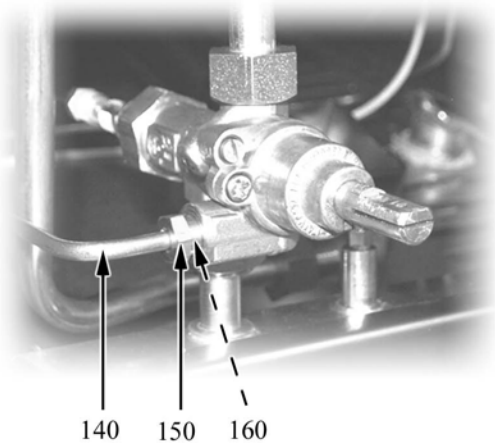
140
150
160

ID	Modello	Tipo	Voltaggio	Descrizione	Codici del produttore
Module: Parti esterne e rubinetto					
140	RUB			Conduttura	41823560500
150	RUB			Dado	6A016110
160	RUB			Bicono	6A016120
170	RUB			By-pass 90	822450260
170	RUB			By-pass 80	822450240
170	RUB			By-pass 135	822450300
170	RUB			By-pass 160	822450310
170	RUB			By-pass 125	822450690

RUB= MODELLO CON RUBINETTO, VAL=MODELLO CON VALVOLA

7FT400=7FT/G400, 7FTT400=7FTT/G400, 7FTT405=7FTT/G405, 79FT410=7FT/G410, 7FTT410=7FTT/G410, 7FTT415=7FTT/G415, 7FT800=7FT/G800, 7FTT800=7FTT/G800, 7FTT805=7FTT/G805, 7FT810=7FT/G810, 7FTT810=7FTT/G810, 7FTT815=7FTT/G815, 7FT820=7FT/G820, 7TT820=7FTT/G820, 7FTT825=7FTT/G825, 7FTV400=7FTV/G400, 7FTTV400=7FTTV/G400, 7FTTV405=7FTTV/G405, 7FTV410=7FTV/G410, 7FTTV410=7FTTV/G410, 7FTTV415= 7FTTV/G415, 7FTTV800=7FTTV/G800, 7FTTV805=7FTTV/G805, 7FTV810=7FTV/G810, 7FTTV810= 7FTTV/G810, 7FTTV815=7FTTV/G815, 7FTV820=7FTV/G820, 7FTTF800=7FTTF/G800, 7FTTFE800=7FTTF/GE800, 7FTTF820=7FTTF/G820, 7FTTFE820=7FTTF/GE820, 7TTFE805=7FTTF/GE805, 7FTTFE825=7FTTF/GE825

A=3/N/PE~400/230V 50Hz

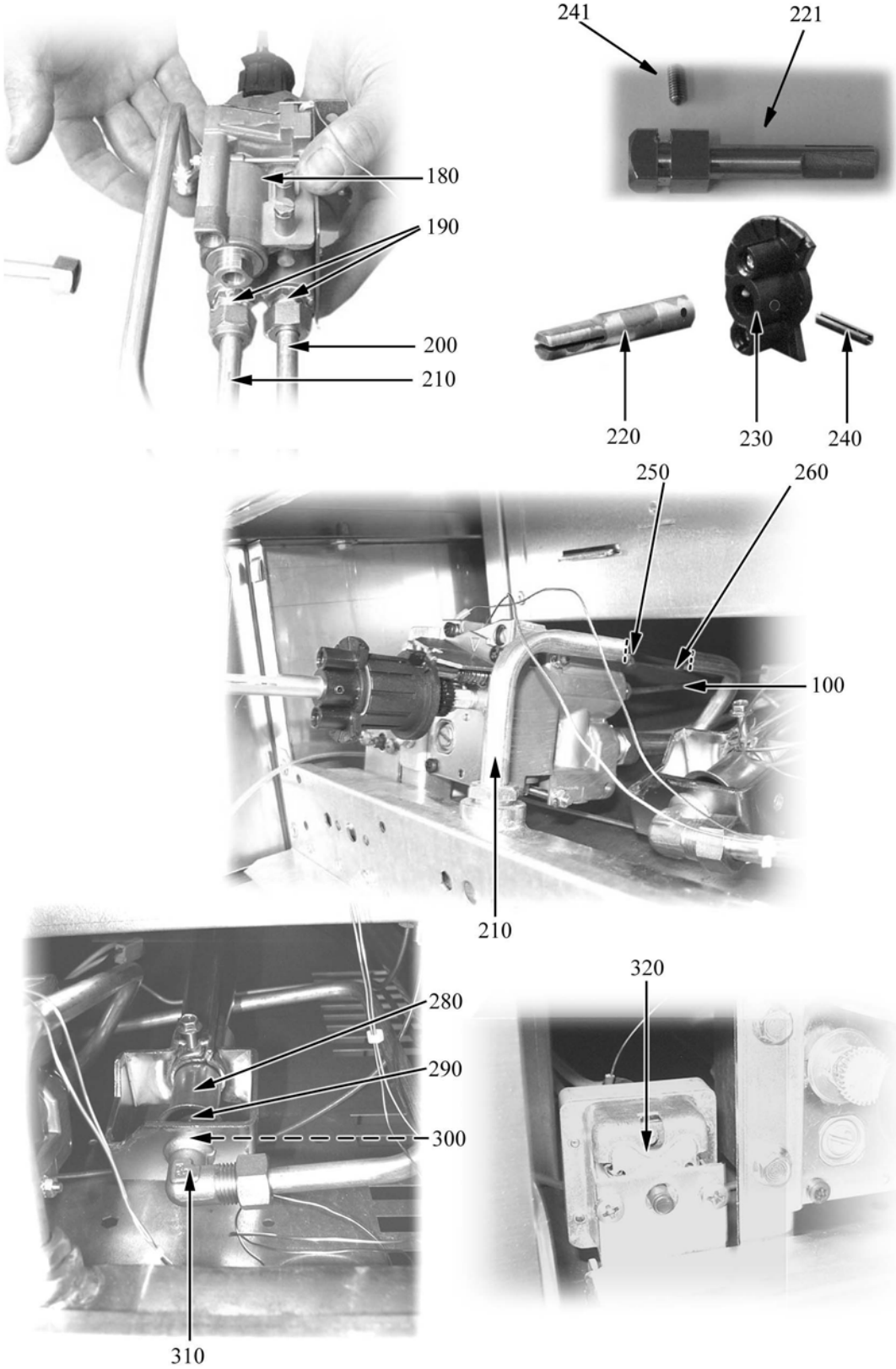
180
190
200
210
241
221
220
230
240
250
260
100
210
280
290
300
310
320

ID	Modello	Tipo	Voltaggio	Descrizione	Codici del produttore
Module:Valvola e termostato di sicurezza					
180	VAL			Valvola	826920012
190	VAL			Raccordo	822450170
200	VAL			Conduttura	823560471
210	VAL			Conduttura	823560022
220	VAL			Attacco manopola	822160011
221	VAL			Attacco manopola	2518650
230	VAL			Flangia	824710060
240	VAL			Spina elastica	418227993140
241	VAL			Grano di fissaggio	6A009190
250	VAL			Raccordo bicono	6A011608
100				Termocoppia	6A011904
100	VAL			Termocoppia	6A011909
280				Boccola	822120040
290				Ugello 1.10	41822140010
290				Ugello 1.25	41822140020
290				Ugello 1.90	41822140050
290				Ugello 2.10	41822140060

RUB= MODELLO CON RUBINETTO, VAL=MODELLO CON VALVOLA

7FT400=7FT/G400, 7FTT400=7FTT/G400, 7FTT405=7FTT/G405, 79FT410=7FT/G410, 7FTT410=7FTT/G410, 7FTT415=7FTT/G415, 7FT800=7FT/G800, 7FTT800=7FTT/G800, 7FTT805=7FTT/G805, 7FT810=7FT/G810, 7FTT810=7FTT/G810, 7FTT815=7FTT/G815, 7FT820=7FT/G820, 7TT820=7FTT/G820, 7FTT825=7FTT/G825, 7FTV400=7FTV/G400, 7FTTV400=7FTTV/G400, 7FTTV405=7FTTV/G405, 7FTV410=7FTV/G410, 7FTTV410=7FTTV/G410, 7FTTV415= 7FTTV/G415, 7FTTV800=7FTTV/G800, 7FTTV805=7FTTV/G805, 7FTV810=7FTV/G810, 7FTTV810= 7FTTV/G810, 7FTTV815=7FTTV/G815, 7FTV820=7FTV/G820, 7FTTF800=7FTTF/G800, 7FTTFE800=7FTTF/GE800, 7FTTF820=7FTTF/G820, 7FTTFE820=7FTTF/GE820, 7TTFE805=7FTTF/GE805, 7FTTFE825=7FTTF/GE825

A=3/N/PE~400/230V 50Hz

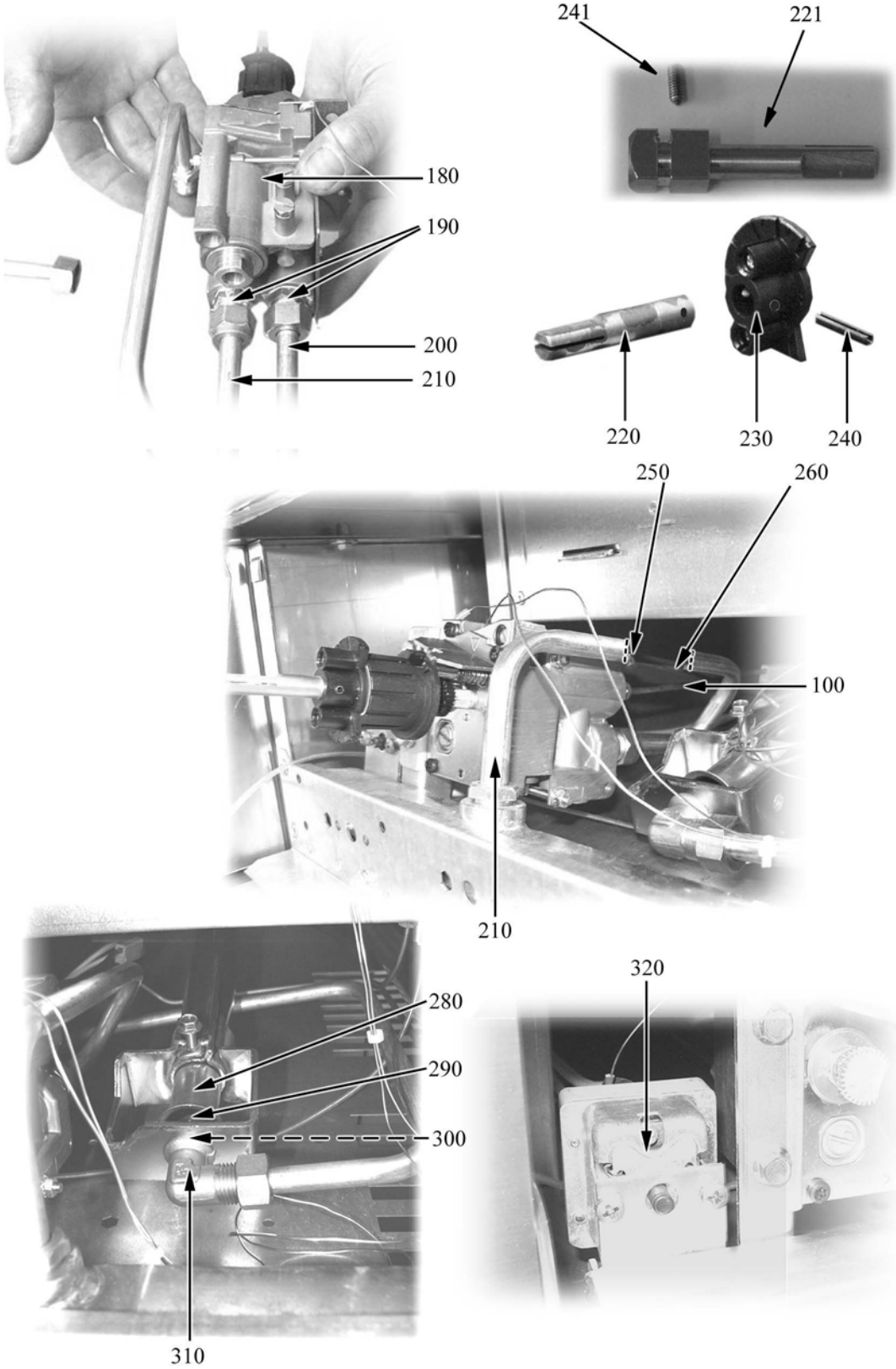
180
190
200
210
241
221
220
230
240
250
260
100
210
280
290
300
310
320

ID	Modello	Tipo	Voltaggio	Descrizione	Codici del produttore
Module:Valvola e termostato di sicurezza					
300				Dado	822180010
310				Raccordo	822450010
320	VAL	7FTT400,7FTT405,7FTT410,7FTT415,7FTT800,7FTT805,7FTT810,7FTT815,7FTT820,7FTT825,7FTTV400,7FTTV405,7FTTV410,7FTT415,7FTT800,7FTT805,7FTT810,7FTT815,7FTTV820,7FTTV820,7FTTF800,7FTTFE800,7FTTF820,7FTTFE800,7FTTF805,7FTTF805,7FTTFE805,7FTTFE825		Termostato sicurezza	826630010

RUB= MODELLO CON RUBINETTO, VAL=MODELLO CON VALVOLA

7FT400=7FT/G400, 7FTT400=7FTT/G400, 7FTT405=7FTT/G405, 79FT410=7FT/G410, 7FTT410=7FTT/G410, 7FTT415=7FTT/G415, 7FT800=7FT/G800, 7FTT800=7FTT/G800, 7FTT805=7FTT/G805, 7FT810=7FT/G810, 7FTT810=7FTT/G810, 7FTT815=7FTT/G815, 7FT820=7FT/G820, 7TT820=7FTT/G820, 7FTT825=7FTT/G825, 7FTV400=7FTV/G400, 7FTTV400=7FTTV/G400, 7FTTV405=7FTTV/G405, 7FTV410=7FTV/G410, 7FTTV410=7FTTV/G410, 7FTTV415= 7FTTV/G415, 7FTTV800=7FTTV/G800, 7FTTV805=7FTTV/G805, 7FTV810=7FTV/G810, 7FTTV810= 7FTTV/G810, 7FTTV815=7FTTV/G815, 7FTV820=7FTV/G820, 7FTTF800=7FTTF/G800, 7FTTFE800=7FTTF/GE800, 7FTTF820=7FTTF/G820, 7FTTFE820=7FTTF/GE820, 7TTFE805=7FTTF/GE805, 7FTTFE825=7FTTF/GE825

A=3/N/PE~400/230V 50Hz

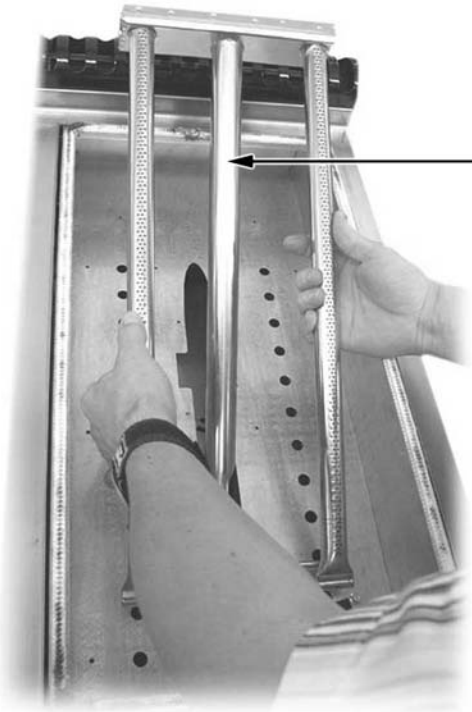
330

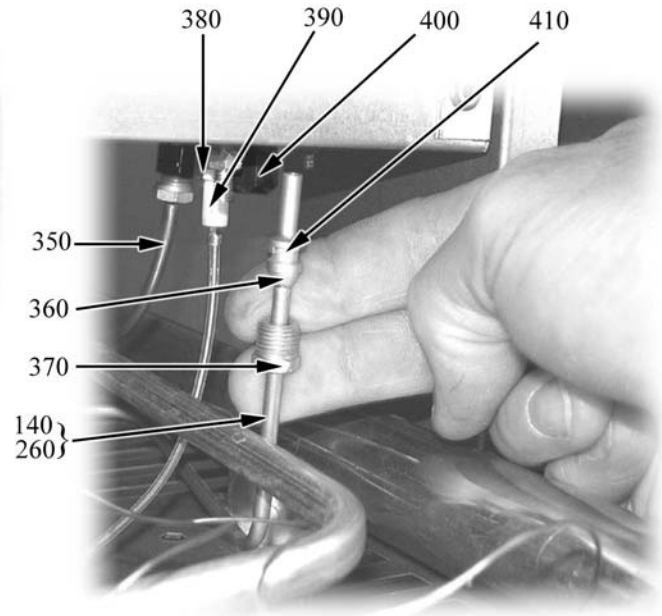
380
390
400
410
350
360
370
140
260

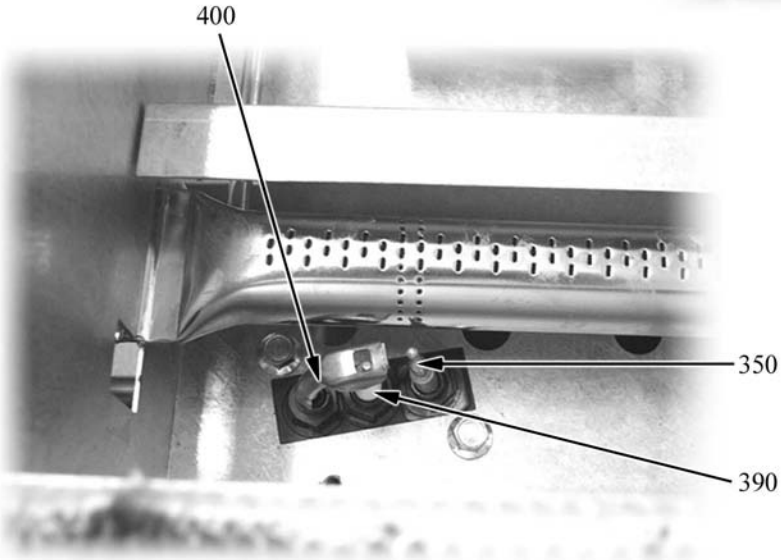
400
350
390

ID	Modello	Tipo	Voltaggio	Descrizione	Codici del produttore
Module:Bruciatore e pilota					
330				Bruciatore	41826390023
100				Termocoppia	826920020
360				Bicono	822450050
370				Raccordo	822450040
380				Raccordo	6A011707
390				Candela	6A013301
400				Pilota	826920030
410				Ugello 27	6A013107
410				Ugello 19	822140380
140	RUB			Conduttura	41823560500
260	VAL			Conduttura	41823560041
260	VAL			Conduttura	41823560401

RUB= MODELLO CON RUBINETTO, VAL=MODELLO CON VALVOLA

7FT400=7FT/G400, 7FTT400=7FTT/G400, 7FTT405=7FTT/G405, 79FT410=7FT/G410, 7FTT410=7FTT/G410, 7FTT415=7FTT/G415, 7FT800=7FT/G800, 7FTT800=7FTT/G800, 7FTT805=7FTT/G805, 7FT810=7FT/G810, 7FTT810=7FTT/G810, 7FTT815=7FTT/G815, 7FT820=7FT/G820, 7TT820=7FTT/G820, 7FTT825=7FTT/G825, 7FTV400=7FTV/G400, 7FTTV400=7FTTV/G400, 7FTTV405=7FTTV/G405, 7FTV410=7FTV/G410, 7FTTV410=7FTTV/G410, 7FTTV415= 7FTTV/G415, 7FTTV800=7FTTV/G800, 7FTTV805=7FTTV/G805, 7FTV810=7FTV/G810, 7FTTV810= 7FTTV/G810, 7FTTV815=7FTTV/G815, 7FTV820=7FTV/G820, 7FTTF800=7FTTF/G800, 7FTTFE800=7FTTF/GE800, 7FTTF820=7FTTF/G820, 7FTTFE820=7FTTF/GE820, 7TTFE805=7FTTF/GE805, 7FTTFE825=7FTTF/GE825

A=3/N/PE~400/230V 50Hz

500
490
480
420
450
440
430
460
470

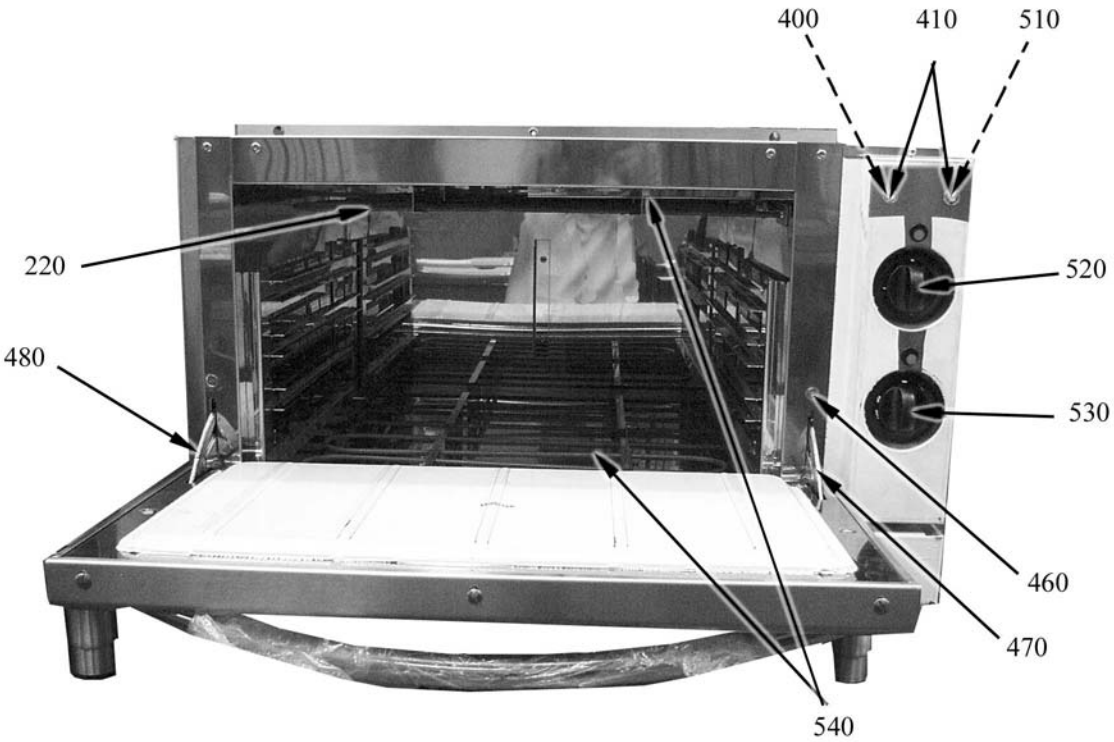
400
410
510
220
520
480
530
460
470
540

ID	Modello	Tipo	Voltaggio	Descrizione	Codici del produttore
400		7FTTFE800,7FTTFE805, 7FTTFE820,7FTTFE825		Segnalatore luminoso verde	826650050
410		7FTTFE800,7FTTFE805, 7FTTFE820,7FTTFE825		Gemma bianca	6A039207
510		7FTTFE800,7FTTFE805, 7FTTFE820,7FTTFE825		Manopola nera per forno	824710110
430		7FTTFE800,7FTTFE805, 7FTTFE820,7FTTFE825		Accensione piezoelettrica	41826630020
440		7FTTFE800,7FTTFE805, 7FTTFE820,7FTTFE825		Rondella	822160540
450		7FTTFE800,7FTTFE805, 7FTTFE820,7FTTFE825		Cappuccio	826630420
460		7FTTFE800,7FTTFE805, 7FTTFE820,7FTTFE825		Portarullini per cerniera	6A035930
470		7FTTFE800,7FTTFE805, 7FTTFE820,7FTTFE825		Cerniera dx	6A035910
480		7FTTFE800,7FTTFE805 7FTTFE820,7FTTFE825		Cerniera sx	6A035920
490		7FTTFE800,7FTTFE805, 7FTTFE820,7FTTFE825		Suola forno	41821410191
500		7FTTFE800,7FTTFE805, 7FTTFE820,7FTTFE825		Griglia	41826330030
510		7FTTFE800,7FTTFE805, 7FTTFE820,7FTTFE825		Segnalatore luminoso arancio	6A038506
520		7FTTFE800,7FTTFE805, 7FTTFE820,7FTTFE825		Manopola commutatore forno elet-trico	824710710
530		7FTTFE800,7FTTFE805, 7FTTFE820,7FTTFE825		Manopola forno elettrico nera	824710270
540		7FTTFE800,7FTTFE805, 7FTTFE820,7FTTFE825		Resistenza 1500 W	826620041

RUB= MODELLO CON RUBINETTO, VAL=MODELLO CON VALVOLA

7FT400=7FT/G400, 7FTT400=7FTT/G400, 7FTT405=7FTT/G405, 79FT410=7FT/G410, 7FTT410=7FTT/G410, 7FTT415=7FTT/G415, 7FT800=7FT/G800, 7FTT800=7FTT/G800, 7FTT805=7FTT/G805, 7FT810=7FT/G810, 7FTT810=7FTT/G810, 7FTT815=7FTT/G815, 7FT820=7FT/G820, 7TT820=7FTT/G820, 7FTT825=7FTT/G825, 7FTV400=7FTV/G400, 7FTTV400=7FTTV/G400, 7FTTV405=7FTTV/G405, 7FTV410=7FTV/G410, 7FTTV410=7FTTV/G410, 7FTTV415= 7FTTV/G415, 7FTTV800=7FTTV/G800, 7FTTV805=7FTTV/G805, 7FTV810=7FTV/G810, 7FTTV810= 7FTTV/G810, 7FTTV815=7FTTV/G815, 7FTV820=7FTV/G820, 7FTTF800=7FTTF/G800, 7FTTFE800=7FTTF/GE800, 7FTTF820=7FTTF/G820, 7FTTFE820=7FTTF/GE820, 7TTFE805=7FTTF/GE805, 7FTTFE825=7FTTF/GE825

A=3/N/PE~400/230V 50Hz