Compak
COFFEE GRINDERS

ORIGINAL
SPARE PARTS

K-3 Touch / K-3 Shop / K-3 Push
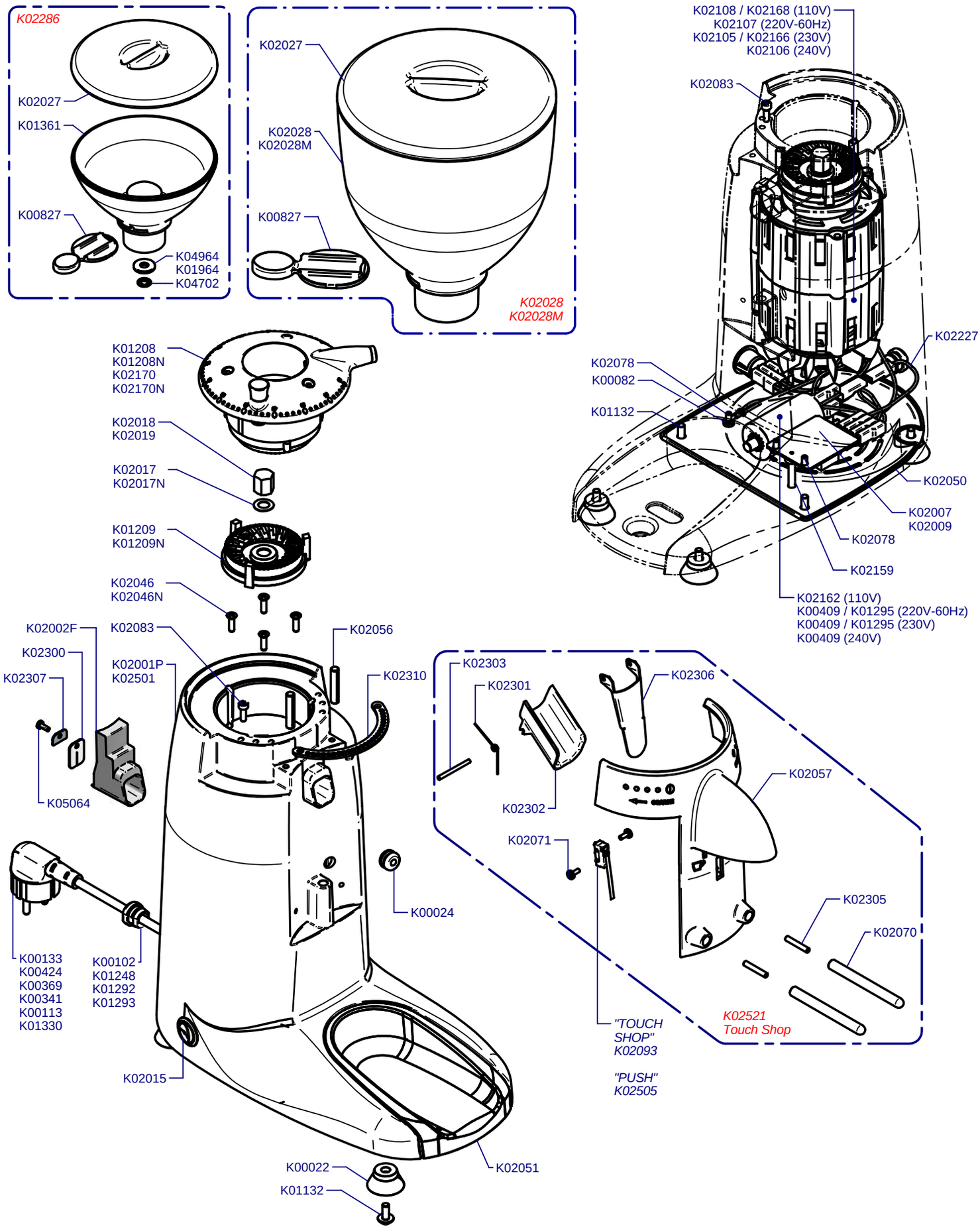
Updated 14/07/2008