Compak
COFFEE GRINDERS

ORIGINAL
SPARE PARTS

# K-10 Conic / K-10 Conic Telescopic
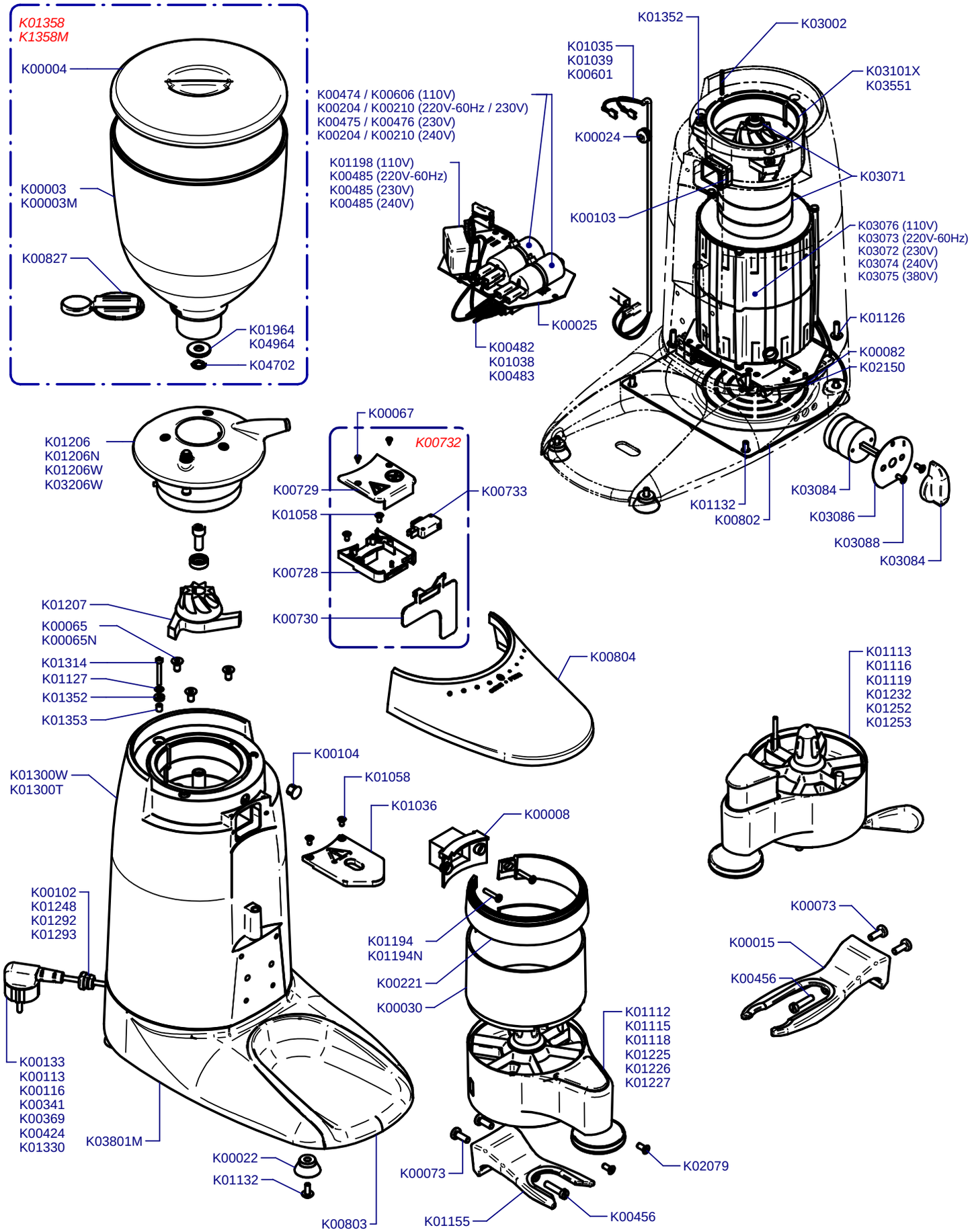
Updated 14/07/2008