Compak
COFFEE GRINDERS

ORIGINAL
SPARE PARTS

K-3 Elite
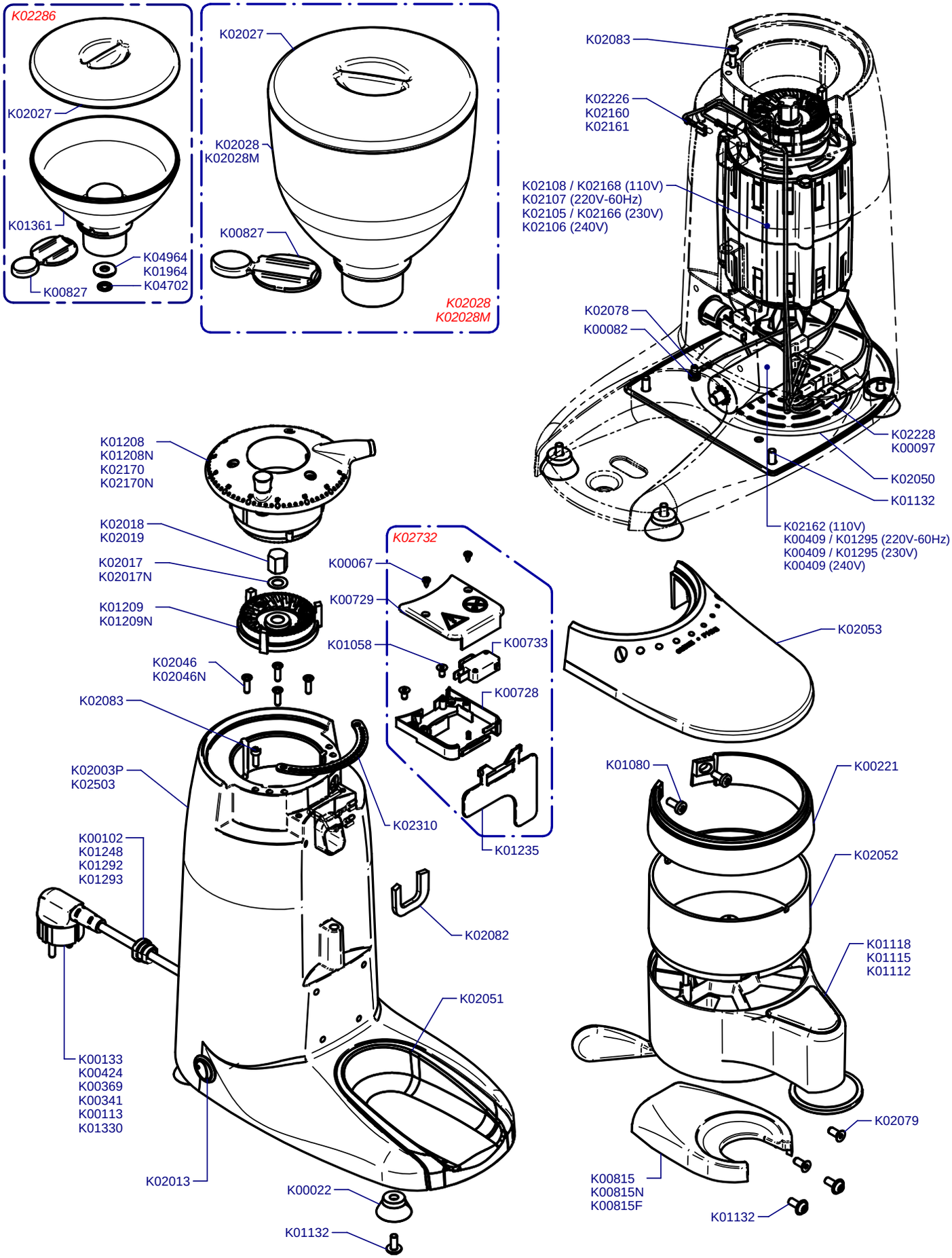
Updated 14/07/2008