DESPIECE TECNICO

Cocinas a Gas
Gas ranges
Fourneaux à gaz
Gas-herde
Cucine a gas
Fogão a gás

GAMA 900

Modelos:

CG9-20 PLUS
CG9-40 PLUS
CG9-60 PLUS
CG9-41 PLUS
CG9-61 PLUS
CG9-82 PLUS
CGE9-41 PLUS

Octubre 2011 October
Revisado Mayo 2014 May Revised

FAGOR

FAGOR INDUSTRIAL

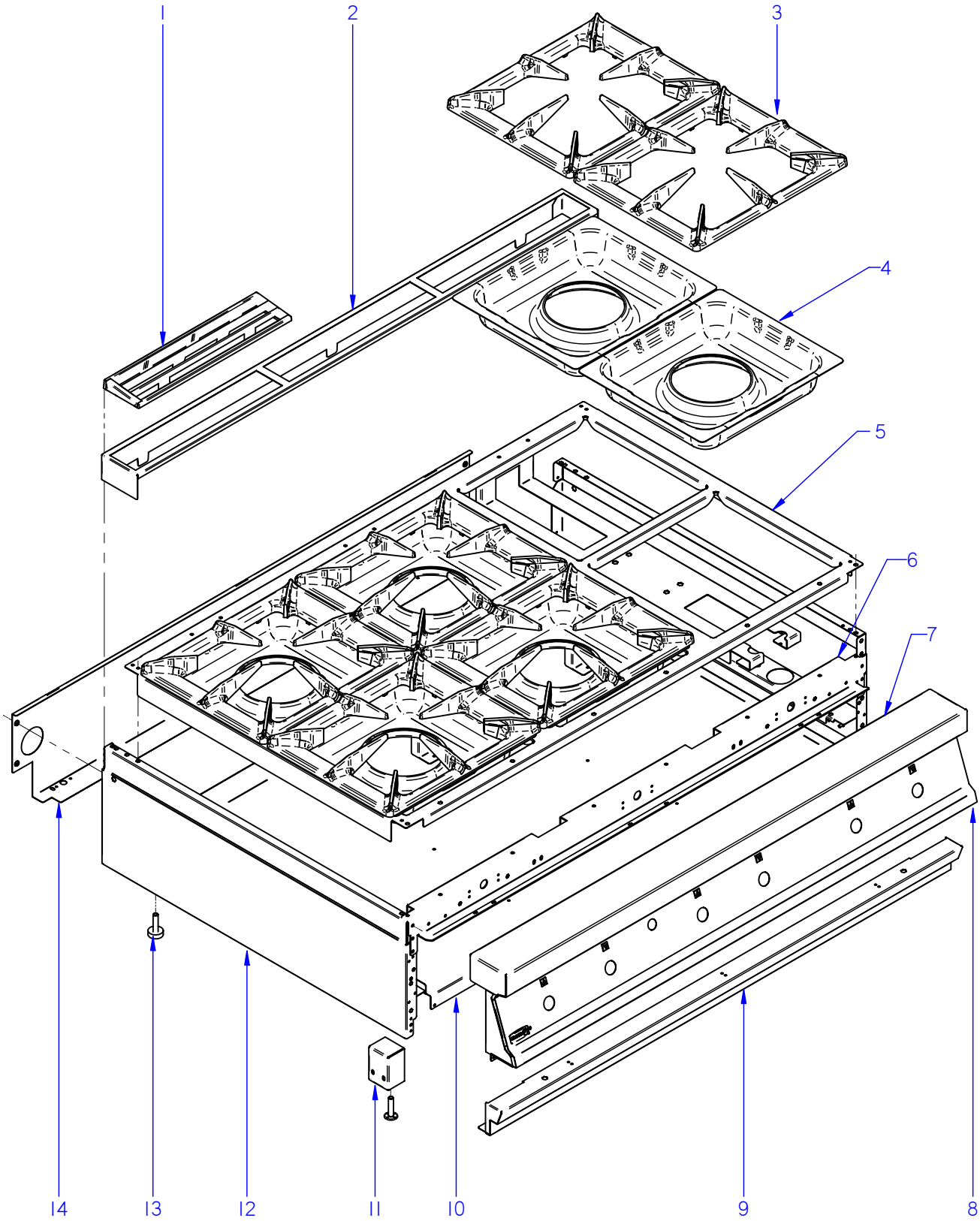

ITEM MARCADO EN COLOR = REPUESTO RECOMENDADO
COLOURED ITEM = RECOMMENDED SPARE PART

Nº plano / N º plane	Firma	Fecha / Date	Denominación / Denomination: MUEBLE / FITTING	Lamina / Sheet	
C-2860		2011-09	CG9-20 PLUS / 40 PLUS / 60 PLUS	1	Fagor Industrial S.Coop. FAGOR Oñate

MOD.	COCINAS / RANGES	ZONA / ZONE	MUEBLE / FITTING	PLANO DIAGRAM	C-2860

ITEM	CODIGO REFERENCE	DENOMINACION	DENOMINATION	CG9-20 PLUS	CG9-40 PLUS	CG9-60 PLUS						ELIMINADO ELIMINATED	INTRODUCID. INTRODUCED	NOTAS
1	R205425000	EMBELLECEDOR ESMALTE	ENAMEL TRIM	1	2	3								
2	R205438000	SOPORTE EMBELLECEDOR 0,5 M	TRIM SUPPORT 0.5 M	1	_	_								
2	R205439000	SOPORTE EMBELLECEDOR 1 M	TRIM SUPPORT 1 M	_	1	_								
2	R205440000	SOPORTE EMBELLECEDOR 1,5 M	TRIM SUPPORT 1.5 M	_	_	1								
3	U035409000	PARRILLA GAMA 900	GRILL 900 RANGE	2	4	6								
4	U025473000	BACINETA QUEMADOR G900	BASIN BURNER G900	2	4	6								
5	U025474000	MESA 0,5 M G900	BENCH 0.5 M G900	1	_	_								
5	U025472000	MESA 1 M G900	BENCH 1 M G900	_	1	_								
5	U025475000	MESA 1,5 M G900	BENCH 1.5 M G900	_	_	1								
	Q152004000	TORNIL, APLASTADO M5x13 A304	FLAT HEADED BOLT M5x13 A304	8	10	12								
	Q221342000	REMACHE EXAGONAL M5	HEXAGONAL RIVET M5	2	4	6								
6	R042611000	ESCUA INTER AMAR ANTE 0,5 M	BRACKET INTER FASTE. FRONT	1	_	_								
6	U042610000	ESCUA INTER AMAR ANTE 1 M	BRACKET INTER FASTE. FRONT	_	1	_								
6	U962607000	ESCUA INTER AMAR ANTE 1,5 M	BRACKET INTER FASTE. FRONT	_	_	1								
	Q012032000	TORNILLO EXAGONAL M5x15	HEXAGONAL BOLT M5x15	6	6	6								
	Q152004000	TORNIL, APLASTADO M5x13 A304	FLAT HEADED BOLT M5x13 A304	4	6	9								
	Q302022000	ARANDELA 16x6x1,2 A304	WASHER 16x6x1.2 A304	4	6	9								
7	U965415000	ANTERIOR MESA 0,5 M AD	BENCH FRONT 0.5 M AD	1	_	_						03.10.11		
7	12006768	ANTERIOR MESA 0,5 M AD	BENCH FRONT 0.5 M AD	1	_	_						07.04.14	03.10.11	
7	12111162	ANTERIOR DE MESA 0.5M (AD)	BENCH FRONT 0.5 M AD	1	_	_							07.04.14	
7	S105403000	ANTERIOR MESA 1 M AD	BENCH FRONT 1 M AD	_	1	_						07.04.14		
7	12111159	ANTERIOR DE MESA.asm1M MEK	BENCH FRONT asm1M MECH.	_	1	_							07.04.14	
7	U965402000	ANTERIOR MESA 1,5 M AD	BENCH FRONT 1.5 M AD	_	_	1						30.11.12		
7	12007213	ANTERIOR MESA 1,5 M PLUS	BENCH FRONT 1.5 M PLUS	_	_	1						07.04.14	30.11.12	
7	12111157	ANTERIOR MESA 1,5M (AD) MEK	BENCH FRONT 1.5 M MECH.	_	_	1							07.04.14	
8	U042802000	PORTAMANDOS COM. CG9-20 AD	CONTROL HOLDER CG9-20 AD	1	_	_								
8	U962805000	PORTAMANDOS COM. CG9-40 AD	CONTROL HOLDER CG9-40 AD	_	1	_								
8	U962807000	PORTAMANDOS COM. CG9-60 AD	CONTROL HOLDER CG9-60 AD	_	_	1								
	U022836000	ESCUDO FAGOR	FAGOR EMBLEM	1	1	1								
	Q221023000	CLIP SUJECIÓN RÁPIDA Ø5	RAPID CONNECT CLIP Ø5	2	2	2								
9	R062805000	ZOCALO 0,5 M	SKIRTING 0.5 M	1	_	_								

MOD.	COCINAS / RANGES	ZONA / ZONE	MUEBLE / FITTING	PLANO DIAGRAM	C-2860

ITEM	CODIGO REFERENCE	DENOMINACION	DENOMINATION	CG9-20 PLUS	CG9-40 PLUS	CG9-60 PLUS						ELIMINADO ELIMINATED	INTRODUCID. INTRODUCED	NOTAS
9	H352817000	ZOCALO BAÑO MARIA	BAIN MARIE SKIRTING		1	_								
9	U032809000	ZOCALO 1,5 M	SKIRTING 1.5 M	_	_	1								
	Q419005000	REMACHE 4x8 ALMG3 / ALUMINIO	RIVET 4X8 ALMG3 / ALUMINIUM	2	2	2								
10	U962646000	BASE CG9-20 AD	BASE CG9-20 AD	1	_	_								
10	U962623000	BASE CG9-40 AD	BASE CG9-40 AD	_	1	_								
10	U962639000	BASE CG9-60 AD	BASE CG9-60 AD	_	_	1								
	Q412000000	REMACHE TUBULAR 4X8	TUBULAR RIVET 4X8	5	12	19								
11	U962627000	ESCUADRA AMARRE PATA AD	LEG FASTENING BRACKET AD	2	2	2								
	Q162030000	TUERCA EXAGONAL M5	HEXAGONAL NUT M5	4	4	4								
	Q302022000	ARANDELA 16x6x1,2 A304	WASHER 16x6x1.2 A304	4	4	4								
	Q221345000	REMACHE EXAGONAL M10	HEXAGONAL RIVET M10	2	2	2								
12	R062811000	PANEL LATERAL IZQUIERDO G900	LEFT SIDE PANEL G900	1	1	1								
S/Nº	R062810000	PANEL LATERAL DERECHO G900	RIGHT SIDE PANEL G900	1	1	1								
	Q221342000	REMACHE EXAGONAL M5	HEXAGONAL RIVET M5	2	6	6								
	Q221343000	REMACHE EXAGONAL M6	HEXAGONAL RIVET M6	4	10	10								
13	Z200107000	PATA	LEG	4	4	4								
	Q221345000	REMACHE EXAGONAL M10	HEXAGONAL RIVET M10	4	4	4								
S/Nº	X010503000	CIERRE MUELLE	LOCK SPRING	3	4	6								
	Q419007000	REMACHE TUBULAR C/V Ø2x6	TUBULAR RIVET C/V Ø2x6	6	8	12								
14	R042838000	PANEL POSTERIOR 0,5 M	REAR PANEL 0.5 M	1	_	_								
14	U042805000	PANEL POSTERIOR 1 M	REAR PANEL 1 M	_	1	_								
14	U962644000	PANEL POSTERIOR 1,5 M	REAR PANEL 1.5 M	_	_	1								
	Q412000000	REMACHE TUBULAR 4X8	TUBULAR RIVET 4X8	4	4	4								
	Q302022000	ARANDELA 16x6x1,2 A304	WASHER 16x6x1.2 A304	4	4	4								

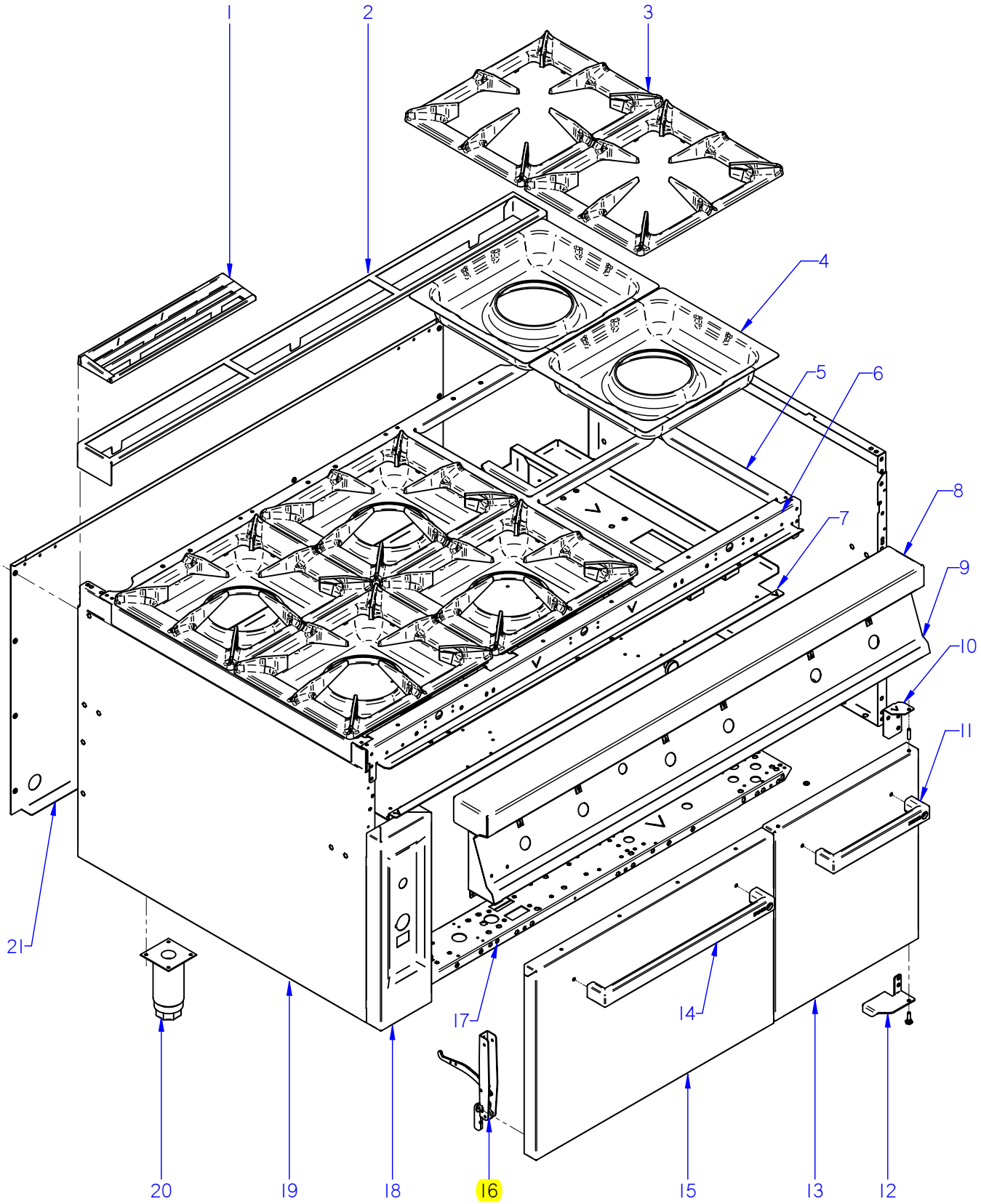

ITEM MARCADO EN COLOR = REPUESTO RECOMENDADO
COLOURED ITEM = RECOMMENDED SPARE PART

Nº plano / N º plane	Firma	Fecha / Date	Denominación / Denomination: MUEBLE / FITTING	Lamina / Sheet	
C-2861	Irene Benito	2011-09	COCINAS CG9-41/ 61/ 82 PLUS/ CGE9-41 PLUS	2	Fagor Industrial S.Coop. FAGOR Oñate

MOD.	COCINAS / RANGES	ZONA / ZONE	MUEBLE / FITTING	PLANO DIAGRAM	C-2861

ITEM	CODIGO REFERENCE	DENOMINACION	DENOMINATION	CG9-41 PLUS	CG9-61 PLUS	CG9-82 PLUS	CGE9-41 PLUS					ELIMINADO ELIMINATED	INTRODUCID. INTRODUCED	NOTAS
1	R205425000	EMBELLECEDOR ESMALTE	ENAMEL TRIM	2	3	4	2							
2	R205439000	SOPORTE EMBELLECEDOR 1 M	TRIM SUPPORT 1 M	1	_	2	1							
2	R205440000	SOPORTE EMBELLECEDOR 1,5 M	TRIM SUPPORT 1.5 M	_	1	_	_							
3	U035409000	PARRILLA GAMA 900	GRILL 900 RANGE	4	6	8	4							
4	U025473000	BACINETA QUEMADOR G900	BASIN BURNER G900	4	6	8	4							
5	U025472000	MESA 1 M G900	BENCH 1 M G900	1	_	2	1							
5	U025475000	MESA 1,5 M G900	BENCH 1.5 M G900	_	1	_	_							
	Q152004000	TORNIL, APLASTADO M5x13 A304	FLAT HEADED BOLT M5x13 A304	10	12	20	10							
	Q221342000	REMACHE EXAGONAL M5	HEXAGONAL RIVET M5	4	6	8	4							
6	U042610000	ESCUA INTER AMAR ANTE 1 M	BRACKET INTER FASTE. FRONT	1	_	2	1							
6	U962607000	ESCUA INTER AMAR ANTE 1,5 M	BRACKET INTER FASTE. FRONT	_	1	_	_							
	Q221342000	REMACHE EXAGONAL M5	HEXAGONAL RIVET M5	4	6	8	4							
	Q012032000	TORNILLO EXAGONAL M5x15	HEXAGONAL BOLT M5x15	4	6	8	4							
	Q152004000	TORNIL, APLASTADO M5x13 A304	FLAT HEADED BOLT M5x13 A304	6	6	12	6							
	Q302022000	ARANDELA 16x6x1,2 A304	WASHER 16x6x1.2 A304	6	6	12	6							
7	U962657000	BASE BANDEJAS 1 M AD	TRAY BASE 1 M AD	1	_	2	1							
7	U962604000	BASE BANDEJAS 1,5 M	TRAY BASE 1.5 M	_	1	_	_							
	Q419005000	REMACHE 4x8 ALMG3 / ALUMINIO	RIVET 4X8 ALMG3 / ALUMINIUM	2	2	4	2							
	Q152004000	TORNIL, APLASTADO M5x13 A304	FLAT HEADED BOLT M5x13 A304	3	3	6	3							
8	S105403000	ANTERIOR MESA 1 M AD	BENCH FRONT 1 M AD	1	_	_	1							
8	12111159	ANTERIOR DE MESA.asm1M MEK	BENCH FRONT asm1M MECH.	1	_	_	1						07.04.14	
8	U965402000	ANTERIOR MESA 1,5 M AD	BENCH FRONT 1.5 M AD	_	1	_	_					30.11.12		
8	12007213	ANTERIOR MESA 1,5 M PLUS	BENCH FRONT 1.5 M PLUS	_	1	_	_					07.04.14	30.11.12	
8	12111157	ANTERIOR MESA 1,5M (AD) MEK	BENCH FRONT 1.5 M MECH.	_	1	_							07.04.14	
8	U965420000	ANTERIOR MESA 2 M AD	BENCH FRONT 2 M AD	_	_	1	_					07.04.14		
8	12111163	ANTERIOR DE MESA 2M (AD) MEK	BENCH FRONT 2 M AD MECH.	_	_	1	_						07.04.14	
	Q152004000	TORNIL, APLASTADO M5x13 A304	FLAT HEADED BOLT M5x13 A304	2	3	4	2							
	Q302022000	ARANDELA 16x6x1,2 A304	WASHER 16x6x1.2 A304	2	3	4	2							
9	U962830000	PORTAMANDOS COM. CG9-41 AD	CONTROL HOLDER CG9-41 AD	1	_	_	1							
9	U962802000	PORTAMANDOS COM. CG9-61 AD	CONTROL HOLDER CG9-61 AD	_	1	_	_							
9	U962821000	PORTAMANDOS COM. CG9-82 AD	CONTROL HOLDER CG9-82 AD	_	_	1	_							

MOD.	COCINAS / RANGES	ZONA / ZONE	MUEBLE / FITTING	PLANO DIAGRAM	C-2861

ITEM	CODIGO REFERENCE	DENOMINACION	DENOMINATION	CG9-41 PLUS	CG9-61 PLUS	CG9-82 PLUS	CGE9-41 PLUS					ELIMINADO ELIMINATED	INTRODUCID. INTRODUCED	NOTAS
	U022836000	ESCUDO FAGOR	FAGOR EMBLEM	1	1	1	1							
	Q221023000	CLIP SUJECIÓN RÁPIDA Ø5	RAPID CONNECT CLIP Ø5	2	2	2	2							
	Q152004000	TORNIL, APLASTADO M5x13 A304	FLAT HEADED BOLT M5x13	4	2	8	4							
10	U962613000	BISAGRA SUPERIOR DERECHA	UPPER RIGHT HINGE	_	1	_	_							
	Q221342000	REMACHE EXAGONAL M5	HEXAGONAL RIVET M5	_	2	_	_							
11	Z710558000	ASA CAPOTA AD	AD HOOD HANDLE	_	1	_	_							
	Q162040000	TUERCA EXAGONAL M6	HEXAGONAL NUT M6	_	2	_	_							
	Q302022000	ARANDELA 16x6x1,2 A304	WASHER 16x6x1.2 A304	_	2	_	_							
12	U020511000	BISAGRA DERECHA INFERIOR	LOWER RIGHT HINGE	_	1	_	_							
	Q232040000	ARANDELA A6	WASHER A6	_	1	_	_							
	X960504000	TORNILLO DE GIRO M8	ROTATION BOLT M8	_	1	_	_							
	Q012042000	TORNILLO EXAGONAL M6x15 A304	HEXAGONAL BOLT M6x15 A304	_	2	_	_							
	Q302022000	ARANDELA 16x6x1,2 A304	WASHER 16x6x1.2 A304	_	2	_	_							
13	U960501000	PUERTA LATERAL AD	SIDE DOOR AD	_	1	_	_							
	Q419005000	REMACHE 4x8 ALMG3 / ALUMINIO	RIVET 4X8 ALMG3 / ALUMINIUM	_	4	_	_							
14	Z900527000	ASA	HANDLE	1	1	2	1							
	Q012041000	TORNILLO EXAGONAL M6x10	HEXAGONAL BOLT M6x10	2	2	4	2							
	Q302022000	ARANDELA 16x6x1,2 A304	WASHER 16x6x1.2 A304	2	2	4	2							
	12038310	**KIT PUERTA HORNO**	**OVEN DOOR KIT**	**1**	**1**	**2**	**1**							
15	U910501000	PUERTA DE HORNO	OVEN DOOR	1	1	2	1							
16	U020528000	BISAGRA CIERRE HORNO	OVEN LOCK HINGE	2	2	4	2							
	Q152022000	TORNILLO M6x8	BOLT M6x8	6	6	12	6							
17	U962622000	LISTON SOPORTE PATAS 1 M AD	LEG SUPPORT STRIP 1 M AD	2	_	_	2							
17	U962601000	LISTON SOPORTE PATAS 1,5 M AD	LEG SUPPORT STRIP 1.5 M AD	_	2	_	_							
17	U962667000	LISTON SOPORTE PATAS 2 M AD	LEG SUPPORT STRIP 2 M AD	_	_	2	_							
18	U962829000	PORTAMAN. LATERAL HORNO AD	OVEN SIDE CONTROL HOLDER	1	1	2	_					01,10,12		
18	12046661	PORTAM. LAT. HORNO PLUS MEK	OVEN SIDE CONTROL HOLDER	1	1	2	_						01,10,12	
18	U962832000	PORTAM.LATERAL HORNO EL. AD	OVEN SIDE CONTROL HOLDER	_	_	_	1							
	Q152004000	TORNIL, APLASTADO M5x13 A304	FLAT HEADED BOLT M5x13 A304	2	2	4	2							

MOD.	COCINAS / RANGES	ZONA / ZONE	MUEBLE / FITTING	PLANO DIAGRAM	C-2861

ITEM	CODIGO REFERENCE	DENOMINACION	DENOMINATION	CG9-41 PLUS	CG9-61 PLUS	CG9-82 PLUS	CGE9-41 PLUS					ELIMINADO ELIMINATED	INTRODUCID. INTRODUCED	NOTAS
19	X162813000	PANEL LATERAL IZQUIERDO G900	LEFT SIDE PANEL G900	1	1	2	1							
S/Nº	U022842000	PANEL LATERAL DERECHO G9-00	RIGHT SIDE PANEL G9-00	1	_	2	1							
S/Nº	X162814000	PANEL LATERAL DERECHO G9-00	RIGHT SIDE PANEL G9-00	_	1	_	_							
	Q221343000	REMACHE EXAGONAL M6	HEXAGONAL RIVET M6	22	22	30	22							
	Q221342000	REMACHE EXAGONAL M5	HEXAGONAL RIVET M5	22	22	44	22							
	Q012043000	TORNILLO EXAGONAL M6x20 A304	HEXAGONAL BOLT M6x20 A304	4	4	4	4							
	Q152004000	TORNILLO APLASTADO M5x13 A304	FLAT HEADED BOLT M5x13 A304	6	6	6	6							
20	X260151000	PATA REGULABLE	ADJUSTABLE LEG	4	4	4	4							
	Q411304000	REMACHE AVIBULB Ø 4,8	AVIBULB RIVET Ø 4.8	16	16	16	16							
21	X022841000	PANEL POSTERIOR 1 M AD	REAR PANEL 1 M AD	1	_	_	1							
21	U962801000	PANEL POSTERIOR 1,5 M AD	REAR PANEL 1.5 M AD	_	1	_	_							
21	U962820000	PANEL POSTERIOR 2 M AD	REAR PANEL 2 M AD	1	_	1	1							
	Q419005000	REMACHE 4x8 ALMG3 / ALUMINIO	RIVET 4X8 ALMG3 / ALUMINIUM	8	11	16	8							

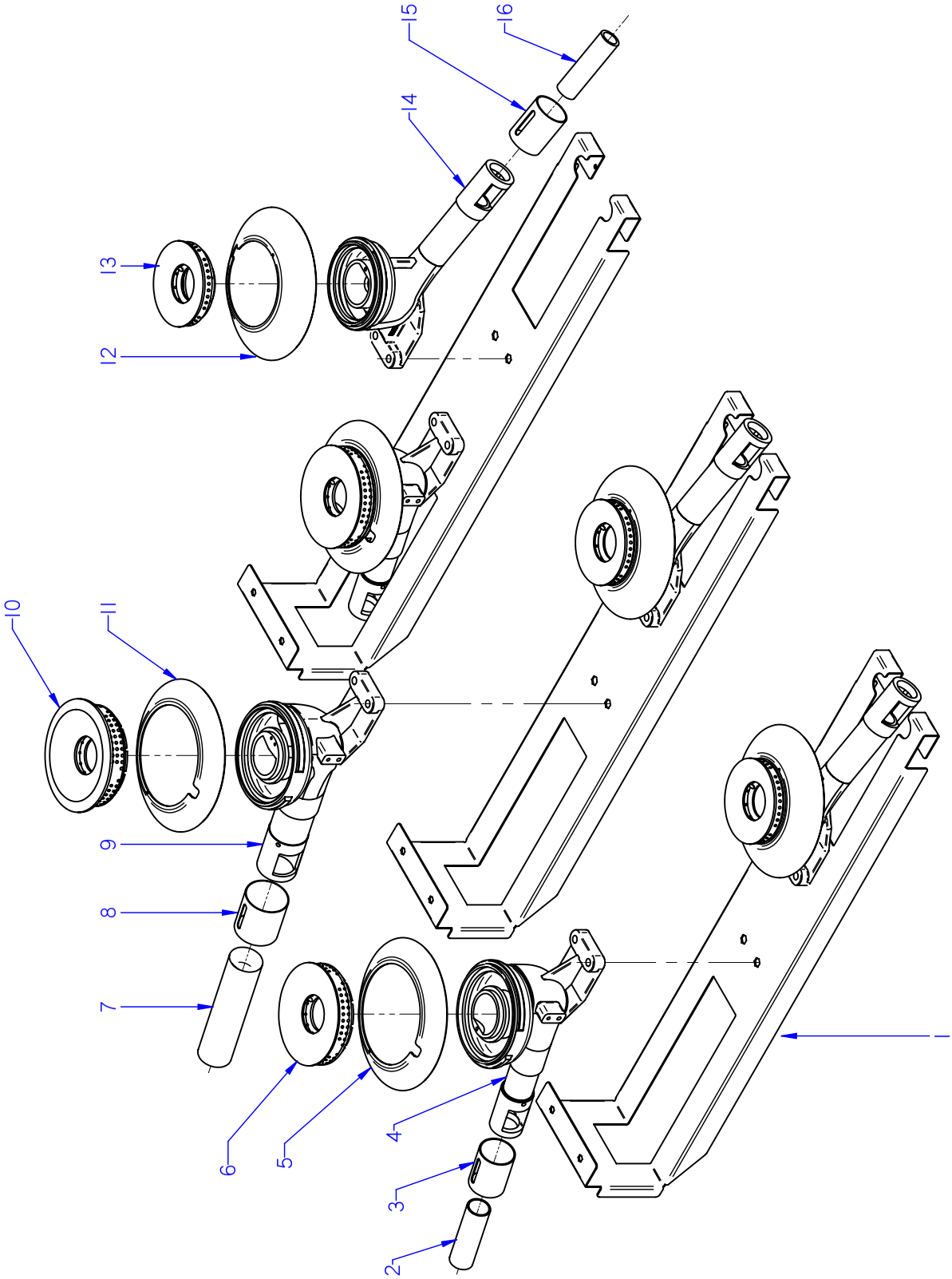

ITEM MARCADO EN COLOR = REPUESTO RECOMENDADO
COLOURED ITEM = RECOMMENDED SPARE PART

Nº plano / N º plane	Firma	Fecha / Date	Denominación / Denomination: QUEMADORES / BURNERS	Lamina / Sheet	
C-2862		2011-09	COCINAS CG9-20/ 40/ 60 PLUS/ CGE9-41 PLUS	3	Fagor Industrial S.Coop. Oñate FAGOR

MOD.	COCINAS / RANGES	ZONA / ZONE	QUEMADORES / BURNERS	PLANO DIAGRAM	C-2862

ITEM	CODIGO REFERENCE	DENOMINACION	DENOMINATION	CG9-20 PLUS	CG9-40 PLUS	CG9-60 PLUS	CGE9-41 PLUS	CG9-20 PLUS H	CG9-40 PLUS H	CG9-60 PLUS H		ELIMINADO ELIMINATED	INTRODUCID. INTRODUCED	NOTAS
1	U962606000	LISTON SOP. QUEMADOR AD	BURNER SUPPORT STRIP	2	2	3	2	2	2	3				
	Q221343000	REMACHE EXAGONAL M6	HEXAGONAL RIVET M6	8	8	12	8	8	8	12				
	Q412000000	REMACHE TUBULAR 4X8	TUBULAR RIVET 4X8	8	8	12	8	8	8	12				
2	U565700000	VENTURI QUEMADOR 8000	VENTURI BURNER 8000	1	1	2	1	1	3	5				
3	U265702000	REGULADOR AIRE	AIR CONTROLLER	1	1	2	1	1	3	5				
	Q132054000	VARILLA ROSCADA M6 x 12	THREADED ROD M6 x 12	1	1	2	1	1	3	5				
	Q162004000	TUERCA EXAGONAL M6	HEXAGONAL NUT M6	1	1	2	1	1	3	5				
4	U025710000	CUERPO QUEMADOR 8000 Kcal/H	BURNER BODY 8000 Kcal/h	1	1	2	1	1	3	5				
5	U915703000	PROTEC. PILOTO QUEMAD. 7000	BURNER PILOT GUARD 7000	1	1	2	1	1	3	5				
	Q372004000	PASADOR ELASTICO 5x20	ELASTIC PIN 5x20	2	2	4	4	2	6	10				
6	U135702500	QUEMADOR 8000	BURNER 8000	1	1	2	1	1	3	5				
	Q371026000	MANGUITO DE SUJECION Ø 4x14	HANDLE Ø 4x14	1	1	2	1	1	3	5				
	Q012045000	TORNILLO EXAGONAL M6x30 A304	HEXAGONAL BOLT M6x30 A304	1	1	2	1	1	3	5				
	Q302022000	ARANDELA 16x6x1,2 A304	WASHER 16x6x1.2 A304	1	1	2	1	1	3	5				
	U565011000	TUERCA GUIA	GUIDE NUT	1	1	2	1	1	1	1				
7	U235707000	VENTURI 10.500	VENTURI 10,500	_	1	1	1	1	1	1				
8	U025706000	REGULADOR DE AIRE 10.000	AIR CONTROL 10.000	_	1	1	1	1	1	1				
	Q132054000	VARILLA ROSCADA M6x12	THREADED ROD M6X12	_	1	1	1	1	1	1				
	Q162004000	TUERCA EXAGONAL M6	HEXAGONAL NUT M6	_	1	1	1	1	1	1				
9	U025711000	CUERPO QUEMADOR 10.000Kcal/H	BURNER BODY 10,000 Kcal/H	_	1	1	1	1	1	1				
	Q371028000	MANGUITO DE SUJECION Ø 3x14	HANDLE Ø 3x14	_	2	2	2	1	1	1				
10	U235701500	DIFUSOR 10.500 Kcal/H	DIFFUSER 10.500 Kcal/H	_	1	1	1	1	1	1		21,10,12		
10	12047137	DIFUSOR 10.500 Kcal/H	DIFFUSER 10.500 Kcal/H	_	1	1	1	1	1	1			21,10,12	
	Q012045000	TORNILLO EXAGONAL M6x30 A304	HEXAGONAL BOLT M6x30 A304	_	1	1	1	1	1	1				
11	U915703000	PROTEC. PILOTO QUEMAD. 7000	BURNER PILOT GUARD 7000	_	1	1	1	1	1	1				
	Q372004000	PASADOR ELASTICO 5x20	ELASTIC PIN 5x20	_	2	2	4	2	1	2				
12	U025712000	PROTEC. PILOTO QUEMAD. 4000	BURNER PILOT GUARD 4000	1	2	3	2	_	_	_				
13	U445731000	QUEMADOR 4000 (00545-010)	BURNER 4000 (00545-010)	1	2	3	2	_	_	_		26,08,12		
13	12039162	QUEMADOR 4000 Kcal/H	BURNER 4000 Kcal/H	1	2	3	2	_	_	_			26,08,12	
	Q012045000	TORNILLO EXAGONAL M6x30 A304	HEXAGONAL BOLT M6x30 A304	1	2	3	2	_	_	_				
	Q302022000	ARANDELA 16x6x1,2 A304	WASHER 16x6x1.2 A304	1	2	3	2	_	_	_				

MOD.	COCINAS / RANGES	ZONA / ZONE	QUEMADORES / BURNERS	PLANO DIAGRAM	C-2862

ITEM	CODIGO REFERENCE	DENOMINACION	DENOMINATION	CG9-20 PLUS	CG9-40 PLUS	CG9-60 PLUS	CGE9-41 PLUS	CG9-20 PLUS H	CG9-40 PLUS H	CG9-60 PLUS H		ELIMINADO ELIMINATED	INTRODUCID. INTRODUCED	NOTAS
14	U025709000	CUERPO QUEMADOR 4000Kcal/H	BURNER BODY 4000 Kcal/H	1	2	3	2	_	_	_				
	Q371026000	MANGUITO DE SUJECION Ø 4x14	HANDLE Ø 4x14	1	2	3	2	_	_	_				
15	U265702000	REGULADOR AIRE	AIR CONTROLLER	1	2	3	2	_	_	_				
	Q132042000	VARILLA ROSCADA M6 x 15	THREADED ROD M6 x 15	1	2	3	2	_	_	_				
	Q131542000	VARILLA ROSCADA M6 x 15	THREADED ROD M6 x 15	1	2	3	2	_	_	_				
	Q162004000	TUERCA EXAGONAL M6	HEXAGONAL NUT M6	1	2	3	2	_	_	_				
16	U125720000	VENTURI QUEMADOR 4000 kcl	VENTURI BURNER 4000 kcl	1	2	3	2	_	_	_				

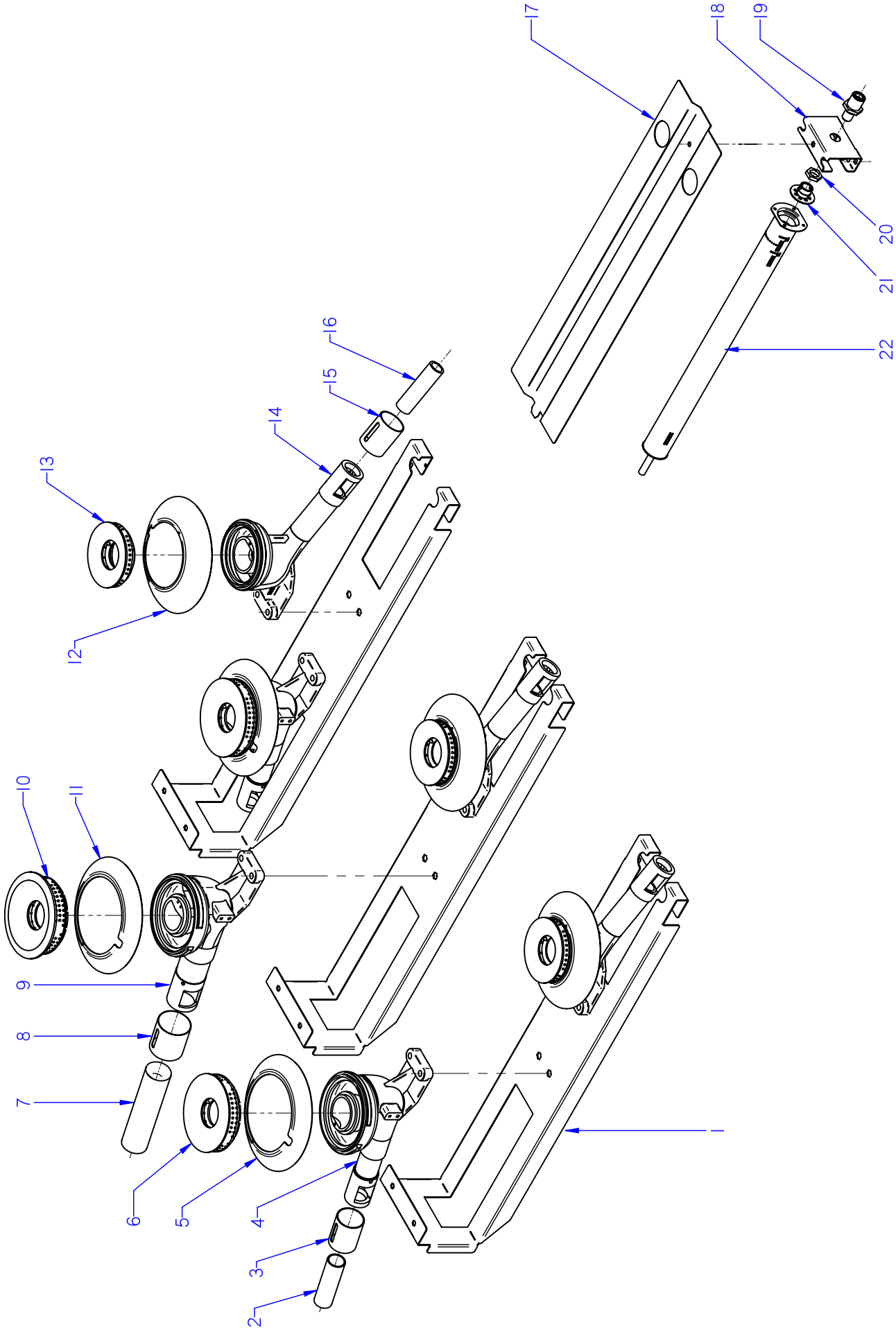

ITEM MARCADO EN COLOR = REPUESTO RECOMENDADO
COLOURED ITEM = RECOMMENDED SPARE PART

Nº plano / N º plane	Firma	Fecha / Date	Denominación / Denomination: QUEMADORES / BURNERS	Lamina / Sheet	
C-2863		2011-09	COCINA CG9-41 / CG9-61 / CG9-82 PLUS	4	Fagor Industrial S.Coop. Oñate FAGOR

MOD.	COCINAS / RANGES	ZONA / ZONE	QUEMADORES / BURNERS	PLANO DIAGRAM	C-2863

ITEM	CODIGO REFERENCE	DENOMINACION	DENOMINATION	CG9-41 PLUS	CG9-61 PLUS	CG9-82 PLUS	CG9-41 PLUS H	CG9-61 PLUS H				ELIMINADO ELIMINATED	INTRODUCID. INTRODUCED	NOTAS
1	U962606000	LISTON SOP. QUEMADOR AD	BURNER SUPPORT STRIP	2	3	4	2	3						
	Q221343000	REMACHE EXAGONAL M6	HEXAGONAL RIVET M6	8	12	16	8	12						
	Q412000000	REMACHE TUBULAR 4X8	TUBULAR RIVET 4X8	8	12	16	8	12						
2	U565700000	VENTURI QUEMADOR 8000	VENTURI BURNER 8000	1	2	2	3	5						
3	U265702000	REGULADOR AIRE	AIR CONTROLLER	1	2	2	3	5						
	Q132054000	VARILLA ROSCADA M6 x 12	THREADED ROD M6 x 12	1	2	2	3	5						
	Q162004000	TUERCA EXAGONAL M6	HEXAGONAL NUT M6	1	2	2	3	5						
4	U025710000	CUERPO QUEMADOR 8000 Kcal/H	BURNER BODY 8000 Kcal/h	1	2	2	3	5						
5	U915703000	PROTEC. PILOTO QUEMAD. 7000	BURNER PILOT GUARD 7000	1	2	2	3	5						
	Q372004000	PASADOR ELASTICO 5x20	ELASTIC PIN 5x20	4	6	4	6	10						
6	U135702500	QUEMADOR 8000	BURNER 8000	1	2	2	3	5						
	Q371026000	MANGUITO DE SUJECION Ø 4x14	HANDLE Ø 4x14	1	2	2	3	5						
7	U235707000	VENTURI 10.500	VENTURI 10,500	1	1	2	1	1						
8	U025706000	REGULADOR DE AIRE 10.000	AIR CONTROL 10.000	1	1	2	1	1						
	Q132054000	VARILLA ROSCADA M6x12	THREADED ROD M6X12	1	1	2	1	1						
	Q162004000	TUERCA EXAGONAL M6	HEXAGONAL NUT M6	1	1	2	1	1						
9	U025711000	CUERPO QUEMADOR 10.000Kcal/H	BURNER BODY 10,000 Kcal/H	1	1	2	1	1						
	Q371028000	MANGUITO DE SUJECION Ø 3x14	HANDLE Ø 3x14	2	2	4	1	1						
10	U235701500	DIFUSOR 10.500 Kcal/H	DIFFUSER 10.500 Kcal/H	1	1	2	1	1				21,10,12		
10	12047137	DIFUSOR 10.500 Kcal/H	DIFFUSER 10.500 Kcal/H	1	1	2	1	1					21,10,12	
	Q012045000	TORNILLO EXAGONAL M6x30 A304	HEXAGONAL BOLT M6x30 A304	1	1	2	1	1						
	Q302022000	ARANDELA 16x6x1,2 A304	WASHER 16x6x1.2 A304	1	1	2	1	1						
11	U915703000	PROTEC. PILOTO QUEMAD. 7000	BURNER PILOT GUARD 7000	1	1	2	1	1						
	Q372004000	PASADOR ELASTICO 5x20	ELASTIC PIN 5x20	4	2	4	1	2						
12	U025712000	PROTEC. PILOTO QUEMAD. 4000	BURNER PILOT GUARD 4000	2	3	4	_	_						
13	U445731000	QUEMADOR 4000 (00545-010)	BURNER 4000 (00545-010)	2	3	4	_	_				26,08,12		
13	12039162	QUEMADOR 4000 Kcal/H	BURNER 4000 Kcal/H	2	3	4	_	_					26,08,12	
14	U025709000	CUERPO QUEMADOR 4000Kcal/H	BURNER BODY 4000 Kcal/H	2	3	4	_	_						
	Q371026000	MANGUITO DE SUJECION Ø 4x14	HANDLE Ø 4x14	2	3	4	_	_						

MOD.	COCINAS / RANGES	ZONA / ZONE	QUEMADORES / BURNERS	PLANO DIAGRAM	C-2863

ITEM	CODIGO REFERENCE	DENOMINACION	DENOMINATION	CG9-41 PLUS	CG9-61 PLUS	CG9-82 PLUS	CG9-41 PLUS H	CG9-61 PLUS H				ELIMINADO ELIMINATED	INTRODUCID. INTRODUCED	NOTAS
15	U265702000	REGULADOR AIRE	AIR CONTROLLER	2	3	4	_	_						
	Q131542000	VARILLA ROSCADA M6 x 15	THREADED ROD M6 x 15	2	3	4	_	_						
	Q162004000	TUERCA EXAGONAL M6	HEXAGONAL NUT M6	2	3	4	_	_						
16	U125720000	VENTURI QUEMADOR 4000 kcl	VENTURI BURNER 4000 kcl	2	3	4	_	_						
17	U915613000	DEFLECTOR QUEMADOR HORNO	OVEN BURNER DEFLECTOR	2	2	4	2	2						
	Q152004000	TORNIL, APLASTADO M5x13 A304	FLAT HEADED BOLT M5x13 A304	1	1	2	1	1						
	Q302022000	ARANDELA 16x6x1,2 A304	WASHER 16x6x1.2 A304	1	1	2	1	1						
18	U105635000	AMARRE QUEMADOR HORNO(HG)	OVEN BURNER FASTENING (HG)	1	1	2	1	1						
	Q012031000	TORNILLO EXAGONAL M5x10 A304	HEXAGONAL BOLT M5x10 A304	2	2	4	2	2						
	Q222041000	REMACHE EXAGONAL M4 (INOX)	HEXAGONAL RIVET M4 (INOX)	4	4	8	4	4						
19	X505724000	MANGUITO PORTATOBERAS	NOZZLE HOLDER SLEEVE	1	1	2	1	1						
20	Q223019000	TUERCA 3/8 GAS LATÓN	NUT 3/8 GAS BRASS	1	1	2	1	1						
21	X505013000	REGULADOR DE AIRE POLIDORO	POLIDORO AIR CONTROL	1	1	2	1	1						
22	U105701000	QUEMADOR HORNO	OVEN BURNER.	1	1	2	1	1						
	Q042022000	TORNILLO AVELLLANADO M4X15	COUNTERSUNK BOLT M4x15	4	4	8	4	4						
S/Nº	U052401000	TOBERA Ø 1,45 BP	NOZZLE Ø 1.45 BP	1	1	2	1	1						
S/Nº	U262400000	TOBERA Ø 2,15 GN	NOZZLE Ø 2.15 GN	1	1	2	1	1						

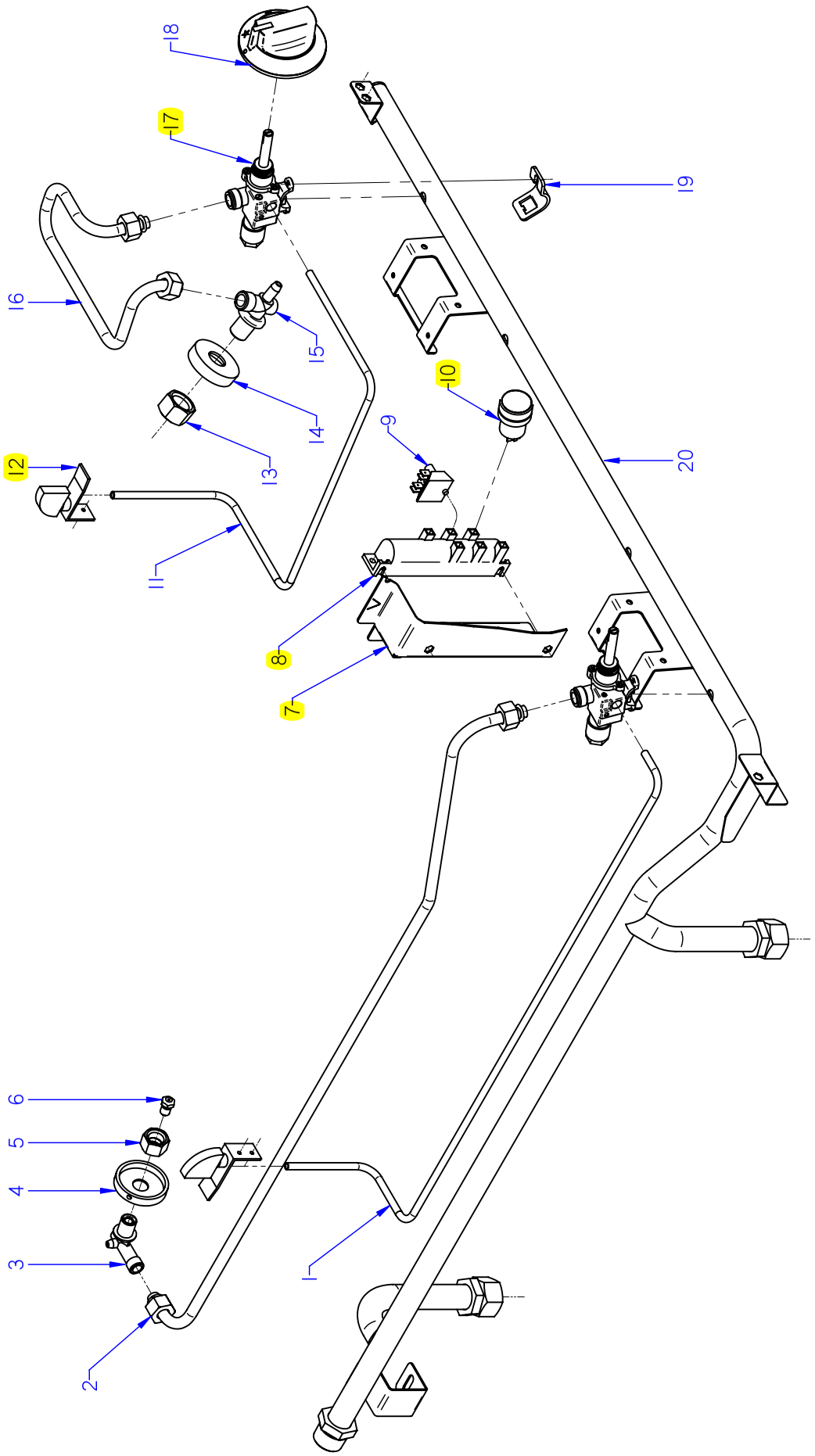

ITEM MARCADO EN COLOR = REPUESTO RECOMENDADO
COLOURED ITEM = RECOMMENDED SPARE PART

Nº plano / N º plane	Firma	Fecha / Date	Denominación / Denomination: PARTE FUNCIONAL / FUNCTIONAL PART	Lamina / Sheet	
C-2864		2011-09	COCINAS CG9-20/ 40/ 60 PLUS/ CGE9-41 PLUS	5	Fagor Industrial S.Coop. FAGOR Oñate

MOD.	COCINAS / RANGES	ZONA / ZONE	PARTE FUNCIONAL / FUNCTIONAL PART	PLANO DIAGRAM	C-2864

ITEM	CODIGO REFERENCE	DENOMINACION	DENOMINATION	CG9-20 PLUS	CG9-40 PLUS	CG9-60 PLUS	CGE9-41 PLUS	CG9-20 PLUS H	CG9-40 PLUS H	CG9-60 PLUS H		ELIMINADO ELIMINATED	INTRODUCID. INTRODUCED	NOTAS
1	U965002000	TUBO PILOTO POSTERIOR AD	REAR PILOT PIPE AD	1	2	3	2	1	2	3				
S/Nº	S312107000	MANGUITO TUBO PILOTO	PILOT PIPE HOSE	2	4	6	4	2	4	6				
S/Nº	X205028000	BICONO Ø 6	BICONE Ø 6	1	2	3	2	1	2	3				
2	U965005000	CON. QUEMADOR POSTERIOR AD	REAR BURNER UNIT COMP.	1	2	3	2	1	2	3				
3	U915014000	PORTATOBERAS HORNO	OVEN NOZZLE HOLDER	1	2	3	2	1	2	3				
	Q153002000	TORNILLO TAPON	CAP BOLT	1	2	3	2	1	2	3				
4	U022620000	POSICIONADOR PORTATOB. G900	NOZZLE-HOLDER POSITION. G90	_	1	1	1	1	1	1				
5	U235703000	TUERCA GUIA 10.500	NUT GUIDE 10,500	_	1	1	1	1	1	1				
6	U122407000	TOBERA Ø 1,05 BP (4000)	NOZZLE Ø 1.05 BP (4000)	1	2	3	2	_	_	_				
6	R302400000	TOBERA Ø 1,65 GN (4000)	NOZZLE Ø 1.65 GN (4000)	1	2	3	2	_	_	_				
6	0631000000	TOBERA Ø 1,40 BP (8000)	NOZZLE Ø 1.40 BP (8000)	1	1	2	1	1	3	5				
6	U112402000	TOBERA Ø 2,10 GN (8000)	NOZZLE Ø 2,10 GN (8000)	1	1	2	1	1	3	5				
6	U112401000	TOBERA Ø 1,55 BP (10500)	NOZZLE Ø 1.55 BP (10500)	_	1	1	1	1	1	1				
6	0631600000	TOBERA Ø 2,40 GN (10500)	NOZZLE Ø 2.40 GN (10500)	_	1	1	1	1	1	1				
7	U962668000	CAJA TREN CHISPA 920 SOLD	TRAIN SPARK BOX 920 SOLD	1	_	_	_	1	_	_				
7	U962669000	CAJA TREN CHISPA SOLD AD	TRAIN SPARK BOX SOLD AD	_	1	1	_	_	1	1		31,10,11		
7	12038838	CAJA TREN CHISPA CG AD	TRAIN SPARK BOX CG AD	_	1	1	_	_	1	1			31,10,11	
	Q012031000	TORNILLO EXAGONAL M5x10	HEXAGONAL BOLT M5x10	2	2	2	2	2	2	2				
8	X163014000	ENCENDEDOR PARA 2 BUJIAS	LIGHTER FOR 2 PLUGS	1	_	_	_	1	_	_				
8	U963001000	TREN DE CHISPAS 6	TRAIN SPARKS 6	_	1	1	1	_	1	1				
9	Z713035000	REGLETA 6MM	C6MM STRIP	1	1	1	1	1	1	1				
10	T723009000	PULSADOR SERIE MICRO	MICRO SWITCH SERIES	1	1	1	1	1	1	1				
11	U965001000	TUBO PILOTO ANTERIOR AD	FRONT PILOT PIPE AD	1	2	3	2	1	2	3				
S/Nº	S312107000	MANGUITO TUBO PILOTO	PILOT PIPE HOSE	2	4	6	4	2	4	6				
S/Nº	U962108000	BICONO Ø 6	BICONE Ø 6	1	2	3	2	1	2	3				

MOD.	COCINAS / RANGES	ZONA / ZONE	PARTE FUNCIONAL / FUNCTIONAL PART	PLANO DIAGRAM	C-2864

ITEM	CODIGO REFERENCE	DENOMINACION	DENOMINATION	CG9-20 PLUS	CG9-40 PLUS	CG9-60 PLUS	CGE9-41 PLUS	CG9-20 PLUS H	CG9-40 PLUS H	CG9-60 PLUS H		ELIMINADO ELIMINATED	INTRODUCID. INTRODUCED	NOTAS
12	U962109000	PILOTO COMPLETO	S140(0140028) PILOT UNIT	2	4	6	4	2	4	6				
S/Nº	U962107000	INYECTOR LPG	INJECTOR LPG	2	4	6	4	2	4	6		23,11,11		
S/Nº	12041740	INYECTOR LPG	INJECTOR LPG	2	4	6	4	2	4	6			23,11,11	
S/Nº	U962106000	INYECTOR NG	INJECTOR NG	2	4	6	4	2	4	6				
S/Nº	U962101000	TERMOPAR 1500	THERMOCOUPLE 1500	1	2	3	2	1	2	3				
S/Nº	U962102000	TERMOPAR 600	THERMOCOUPLE 600	1	2	3	2	1	2	3				
S/Nº	X012101000	BUJIA 915.037	SPARK PLUG	2	4	6	4	2	4	6				
S/Nº	S312107000	MANGUITO TUBO PILOTO	PILOT PIPE HOSE	4	8	12	8	4	8	12				
13	U565011000	TUERCA GUIA	NUT GUIDE	2	3	5	3	1	3	5				
14	U022619000	POSICIONADOR PORTATOB. 4000	NOZZLE-HOLDER POSITIO. 4000	2	3	5	3	1	3	5				
15	U265033000	PORTATOBERAS Ø10	NOZZLE HOLDER Ø10	1	2	3	2	1	2	3				
	Q153002000	TORNILLO TAPON	CAP BOLT	1	2	3	2	1	2	3				
16	U965003000	CONDUC. QUEMADOR ANTERI. AD	FRONT BURNER PIPE AD	1	2	3	2	1	2	3				
17	U912115000	GRIFO 18700 BY-PASS 0,75	TAP 18700 BY-PASS 0.75	1	2	3	2	_	_	_				
17	U912109000	GRIFO 18700 BY-PASS 1,15	TAP 18700 BY-PASS 1.15	1	1	2	1	1	3	5				
17	U912117000	GRIFO 18700 BY-PASS 1,45	TAP 18700 BY-PASS 1.45	_	1	1	1	1	1	1				
18	U022117000	MANDO MONT COCINA GAS Ø8	GAS COOK. ASSEMBLY CTRL Ø8	2	4	6	4	2	4	6				
19	U912104000	BRIDA AMARRE GRIFO 1/2"	TAP FASTENING FLANGE 1/2"	2	4	6	4	2	4	6				
	Q122032000	TORNILLO ALLEN M5x15	ALLEN BOLT M5x15	2	4	6	4	2	4	6				
20	U015010000	DISTRIBUIDOR COMPLET. CG9-20	COMPL. DISTRIBUTOR CG9-20	1	_	_	_	1	_	_				
20	U025042000	DISTRIBUIDOR COMPLET. CG9-40	COMPL. DISTRIBUTOR CG9-40	_	1	_	_	_	1	_				
20	U075004000	DISTRIBUIDOR COMPLET. CG9-60	COMPL. DISTRIBUTOR CG9-60	_	_	1	_	_	_	1				
20	U225003000	DISTRIBUIDOR COMPLE. CGE9-41	COMPL. DISTRIBUTOR CGE9-41	_	_	_	1	_	_	_				

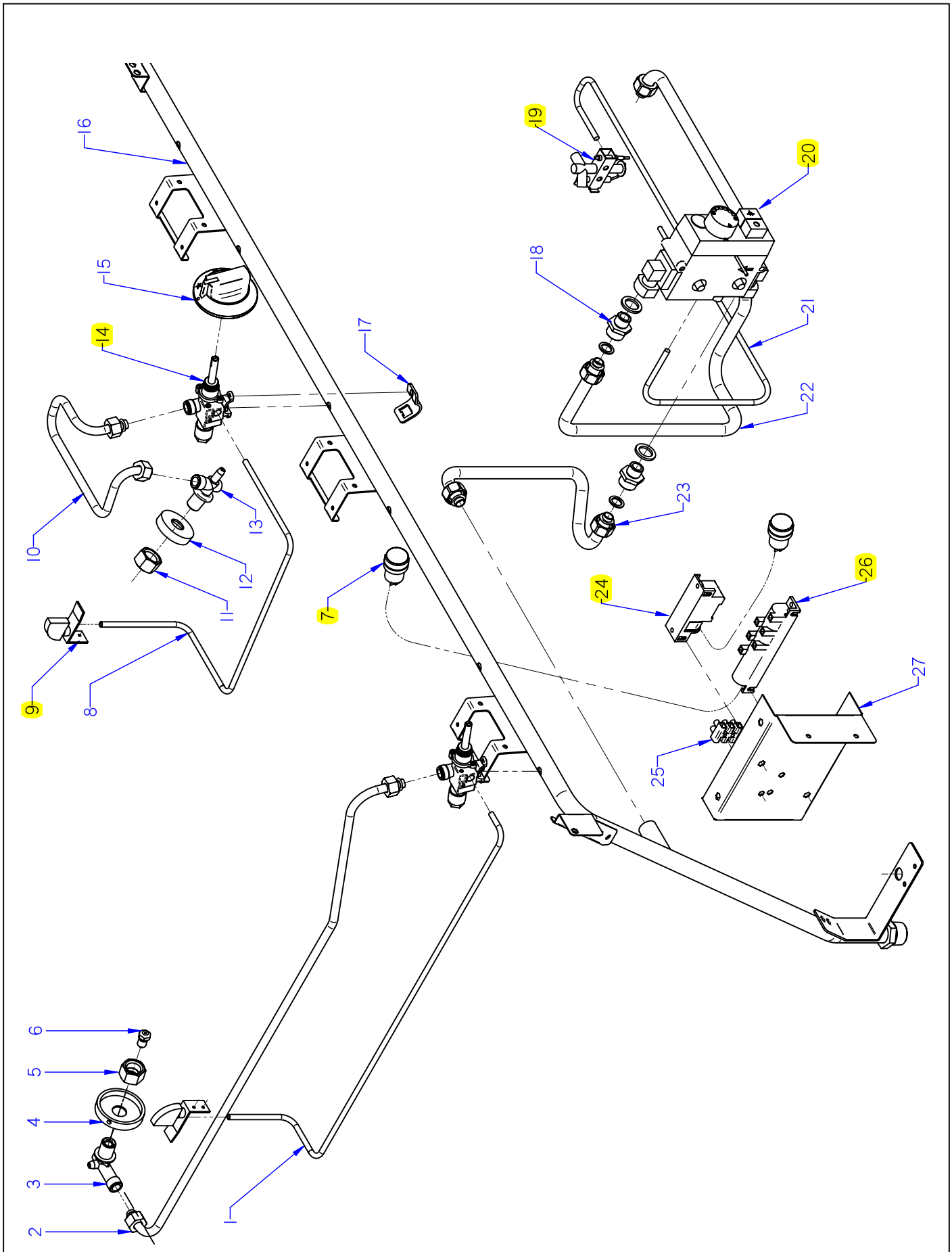

ITEM MARCADO EN COLOR = REPUESTO RECOMENDADO
COLOURED ITEM = RECOMMENDED SPARE PART

Nº plano / Nº plane	Firma	Fecha / Date	Denominación / Denomination: PARTE FUNCIONAL / FUNCTIONAL PART	Lamina / Sheet	
C-2865		2011-09	COCINA CG9-41 / CG9-61 / CG9-82 PLUS	6	Fagor Industrial S.Coop. FAGOR Oñate

MOD.	COCINAS / RANGES	ZONA / ZONE	PARTE FUNCIONAL / FUNCTIONAL PART	PLANO DIAGRAM	C-2865

ITEM	CODIGO REFERENCE	DENOMINACION	DENOMINATION	CG9-41 PLUS	CG9-61 PLUS	CG9-82 PLUS	CG9-41 PLUS H	CG9-61 PLUS H				ELIMINADO ELIMINATED	INTRODUCID. INTRODUCED	NOTAS
1	U965002000	TUBO PILOTO POSTERIOR AD	REAR PILOT PIPE AD	2	3	4	2	3						
S/Nº	S312107000	MANGUITO TUBO PILOTO	PILOT PIPE HOSE	4	6	8	4	6						
S/Nº	X205028000	BICONO Ø 6	BICONE Ø 6	2	3	4	2	3						
2	U965005000	CON. QUEMADOR POSTERIOR AD	REAR BURNER UNIT COMP.	2	3	4	2	3						
3	U915014000	PORTATOBERAS HORNO	OVEN NOZZLE HOLDER	2	3	4	2	3						
	Q153002000	TORNILLO TAPON	CAP BOLT	4	6	8	4	6						
4	U022620000	POSICIONADOR PORTATOB. G900	NOZZLE-HOLDER POSITION. G90	1	1	2	1	1						
5	U235703000	TUERCA GUIA 10.500	NUT GUIDE 10,500	1	1	2	1	1						
6	U122407000	TOBERA Ø 1,05 BP (4000)	NOZZLE Ø 1.05 BP (4000)	2	3	4	_	_						
6	R302400000	TOBERA Ø 1,65 GN (4000)	NOZZLE Ø 1.65 GN (4000)	2	3	4	_	_						
6	0631000000	TOBERA Ø 1,40 BP (8000)	NOZZLE Ø 1.40 BP (8000)	1	2	2	3	5						
6	U112402000	TOBERA Ø 2,10 GN (8000)	NOZZLE Ø 2,10 GN (8000)	1	2	2	3	5						
6	U112401000	TOBERA Ø 1,55 BP (10500)	NOZZLE Ø 1.55 BP (10500)	1	1	2	1	1						
6	0631600000	TOBERA Ø 2,40 GN (10500)	NOZZLE Ø 2.40 GN (10500)	1	1	2	1	1						
7	T723009000	PULSADOR SERIE MICRO	MICRO SWITCH SERIES	2	2	4	2	2						
8	U965001000	TUBO PILOTO ANTERIOR AD	FRONT PILOT PIPE AD	2	3	4	2	3						
S/Nº	S312107000	MANGUITO TUBO PILOTO	PILOT PIPE HOSE	4	6	8	4	6						
S/Nº	U962108000	BICONO Ø 6	BICONE Ø 6	2	3	4	2	3						
9	U962109000	PILOTO COMPLETO	S140(0140028) PILOT UNIT	4	6	8	4	6						
S/Nº	U962107000	INYECTOR LPG	INJECTOR LPG	4	6	8	4	6				23,11,11		
S/Nº	12041740	INYECTOR LPG	INJECTOR LPG	4	6	8	4	6					23,11,11	
S/Nº	U962106000	INYECTOR NG	INJECTOR NG	4	6	8	4	6						
S/Nº	U962101000	TERMOPAR 1500	THERMOCOUPLE 1500	2	3	4	2	3						
S/Nº	U962102000	TERMOPAR 600	THERMOCOUPLE 600	2	3	4	2	3						
S/Nº	X012101000	BUJIA 915.037	SPARK PLUG	4	6	8	4	6						
S/Nº	S312107000	MANGUITO TUBO PILOTO	PILOT PIPE HOSE	8	12	16	8	12						
10	U965003000	CONDUC. QUEMADOR ANTERI. AD	FRONT BURNER PIPE AD	2	3	4	2	3						
11	U56501100	TUERCA GUIA	NUT GUIDE	3	5	6	3	5						
12	U022619000	POSICIONADOR PORTATOB. 4000	NOZZLE-HOLDER POSITION. 400	3	5	6	3	5						
13	U265033000	PORTATOBERAS Ø10	NOZZLE HOLDER Ø10	2	3	4	2	3						
	Q153002000	TORNILLO TAPON	CAP BOLT	2	3	4	2	3						

MOD.	COCINAS / RANGES	ZONA / ZONE	PARTE FUNCIONAL / FUNCTIONAL PART	PLANO DIAGRAM	C-2865

ITEM	CODIGO REFERENCE	DENOMINACION	DENOMINATION	CG9-41 PLUS	CG9-61 PLUS	CG9-82 PLUS	CG9-41 PLUS H	CG9-61 PLUS H				ELIMINADO ELIMINATED	INTRODUCID. INTRODUCED	NOTAS
14	U912115000	GRIFO 18700 BY-PASS 0,75	TAP 18700 BY-PASS 0.75	2	3	4	_	_						
14	U912109000	GRIFO 18700 BY-PASS 1,15	TAP 18700 BY-PASS 1.15	1	2	2	3	2						
14	U912117000	GRIFO 18700 BY-PASS 1,45	TAP 18700 BY-PASS 1.45	1	1	2	1	1						
15	U022117000	MANDO MONT COCINA GAS Ø8	GAS COOK. ASSEMBLY CTRL Ø8	4	6	8	4	6						
16	U025066000	DISTRIBUIDOR COMPLET. CG9-41	COMPLETE DISTRIBUTOR CG9-4	1	_	2	1	_						
16	U035005000	DISTRIBUIDOR COMPLET. CG9-61	COMPLETE DISTRIBUTOR CG9-6	_	1	_	_	1						
	Q152004000	TORNILLO APLASTADO M5x13	FLAT HEAD SCREW M5X13	2	2	8	2	2						
17	U912104000	BRIDA AMARRE GRIFO 1/2"	TAP FASTENING FLANGE 1/2"	4	6	8	4	6						
	Q122032000	TORNILLO ALLEN M5x15	ALLEN BOLT M5x15	4	6	8	4	6						
18	U202103000	MANGUITO REDUCCION 1/2-3/8"	REDUCTION HOSE 1/2-3/8"	2	2	4	2	2						
	Q306058000	ARANDELA 25x17X2.5	WASHER 25x17X2.5	2	2	4	2	2						
19	U322118000	PILOTO COMPLETO 100.062	COMPLETE PILOT LIGHT 100,062	1	1	2	1	1						
S/Nº	U442137000	INYECTOR Ø 0,4 GN	INJECTOR Ø 0.4 GN.	1	1	2	1	1						
S/Nº	U562130000	TERMOPAR L=850	THERMOCOUPLE L=850	1	1	2	1	1						
S/Nº	X022131000	BUJIA	SPARK PLUG	1	1	2	1	1						
	Q012031000	TORNILLO EXAGONAL M5x15 A304	HEXAGONAL BOLT M5x15 A304	2	2	4	2	2						
20	U134324000	VALVULA MINISIT 0710.654	VALVE MINISIT 0710.654	1	1	2	1	1						
S/Nº	Q307041000	JUNTA TORICA 25,4x20,2x2,6	O-RING 25.4x20.2x2.6	2	2	4	2	2						
S/Nº	U134317000	MANDO NEGRO MINI 916.124	BLACK CTRL. MINI 916.124	1	1	2	1	1						
S/Nº	U134318000	CUBIERTA MINISIT 903.052	COVER MINISIT 903.052	1	1	2	1	1						
S/Nº	Q031322000	TORNILLO ALOMADO M4x15	CURVED SCREW M4X15	8	8	16	8	8						
S/Nº	U264300000	RACOR 3/8 906,252	CONNECTION 3/8 906.252	2	2	4	2	2						
S/Nº	U134323000	RACORD BICONO 6 958.031	BICONE CONNECTION 6 958.031	1	1	2	1	1						
21	U025062000	TUBO PILOTO EUROSIT QUEM.	PILOT PIPE EUROSIT BURNER	1	1	2	1	1						
S/Nº	U134323000	RACORD BICONO 6 958.031	BICONE CONNECTION 6 958.031	2	2	4	2	2						
22	U025061000	TUBO COMPLETO EUROSIT QUEM.	COMPLETE PIPE EUROSIT BURN	1	1	2	1	1						
23	U025050000	ENTRADA MINISIT COMPL CG900	INPUT MINISIT COMPL CG900	1	1	2	1	1						
	Q306062000	ARANDELA Ø13,9X10,33x1,5	WASHER Ø13.9X10.33x1.5	8	8	16	8	8						
24	X163014000	ENCENDEDOR PARA 2 BUJIAS	LIGHTER FOR 2 PLUGS	1	1	2	1	1						
25	Z713035000	REGLETA 6MM	C6MM STRIP	1	1	2	1	1						
26	U963001000	TREN DE CHISPAS 6	TRAIN SPARKS 6	1	1	2	1	1						

MOD.	COCINAS / RANGES	ZONA / ZONE	PARTE FUNCIONAL / FUNCTIONAL PART	PLANO DIAGRAM	C-2865

ITEM	CODIGO REFERENCE	DENOMINACION	DENOMINATION	CG9-41 PLUS	CG9-61 PLUS	CG9-82 PLUS	CG9-41 PLUS H	CG9-61 PLUS H				ELIMINADO ELIMINATED	INTRODUCID. INTRODUCED	NOTAS
27	U962683000	CUADRO ELECTRIC COCINA AD	ELECTRIC KITCHEN TABLE AD	1	1	2	1	1						
S/Nº	U962684000	TAPA CUADRO ELEC. AD	TABLE TOP ELEC. AD	1	1	2	1	1						

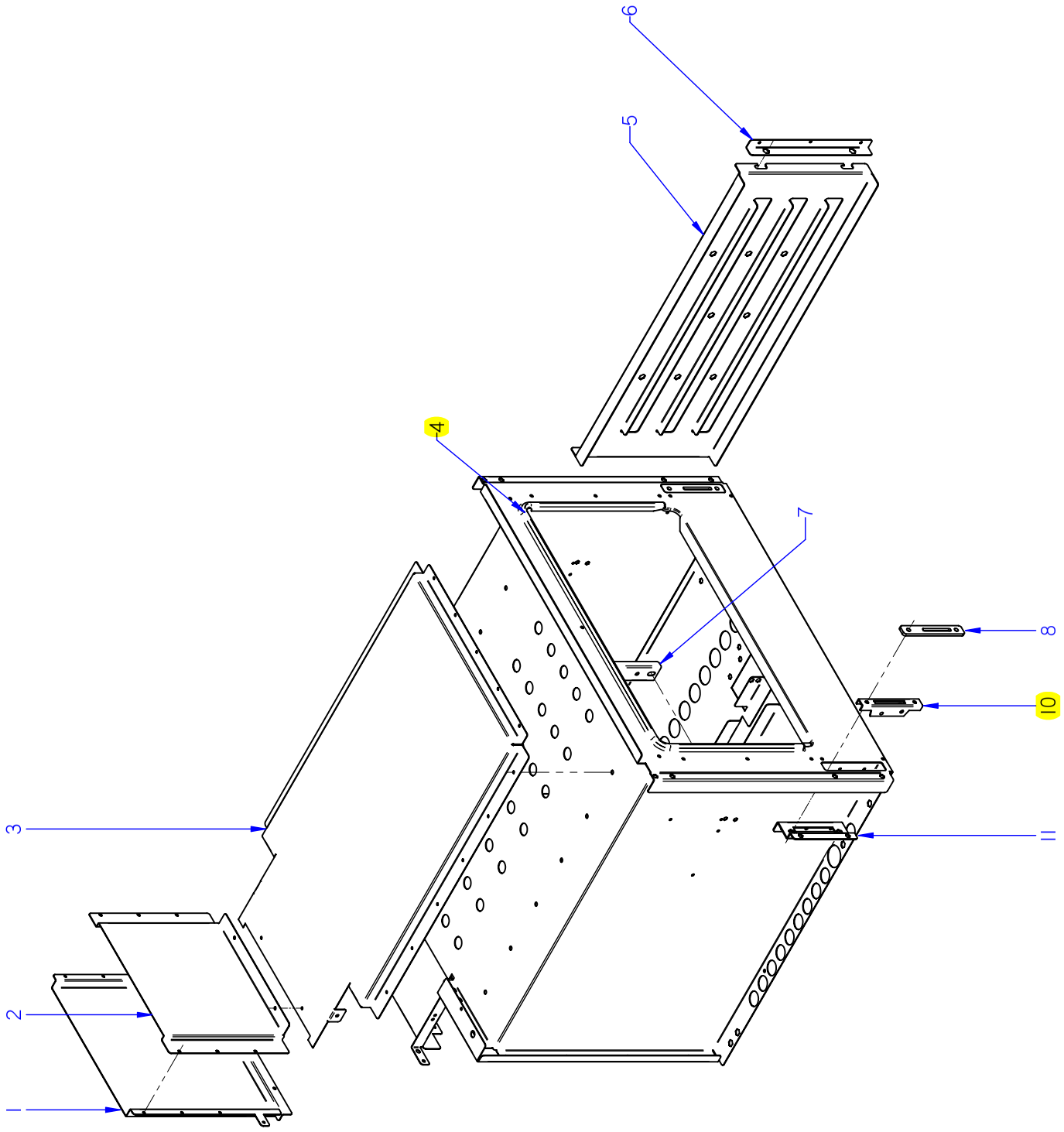

ITEM MARCADO EN COLOR = REPUESTO RECOMENDADO
COLOURED ITEM = RECOMMENDED SPARE PART

Nº plano / N º plane	Firma	Fecha / Date	Denominación / Denomination: HORNO / OVEN	Lamina / Sheet	
C-2866		2011-10	COCINAS CG9-41 / 61 / 82 PLUS	7	Fagor Industrial S.Coop. FAGOR Oñate

MOD.	COCINAS / RANGES	ZONA / ZONE	HORNO / OVEN	PLANO DIAGRAM	C-2866

ITEM	CODIGO REFERENCE	DENOMINACION	DENOMINATION	CG9-41 PLUS	CG9-61 PLUS	CG9-82 PLUS						ELIMINADO ELIMINATED	INTRODUCID. INTRODUCED	NOTAS
1	U965604000	POSTERIOR CHIMENEA AD	REAR FLUEPIPE AD	1	1	2								
	Q419005000	REMACHE 4x8 ALMG3 / ALUMINIO	RIVET 4X8 ALMG3 / ALUMINIUM	14	14	28								
2	U965603000	CHIMENEA ANTERIOR AD	FRONT FLUEPIPE AD	1	1	2								
3	U965602000	CAMARA DE HUMOS AD	SMOKE CHAMBER AD	1	1	2								
	Q419005000	REMACHE 4x8 ALMG3 / ALUMINIO	RIVET 4X8 ALMG3 / ALUMINIUM	19	19	38								
4	U965613000	JUNTA HORNO FIBRA DE VIDRIO	FURNACE FIBERGLASS BOARD	1	1	2								
5	U915607000	GUIA LATERAL HORNO G700	OVEN SIDE GUIDE G700	2	2	4								
	Q151336000	TORNILLO SOPORTE GUIAS	GUIDE SUPPORT BOLT	4	4	8								
	Q302022000	ARANDELA 16X6X1.2 A.304	WASHER 16X6X1.2 A.304	4	4	8								
	Q221321000	REMACHE ROSCAD.NUTSERT.M6	THREADED RIVET .NUTSERT.M6	4	4	8								
6	U915616000	SUPLEMENTO AMARRE GUIA LAT.	SIDE GUIDE FAST. SUPPL.	2	2	4								
	Q412000000	REMACHE TUBULAR 4x8	TUBULAR RIVET 4x8	6	6	12								
7	U055644000	FIJACION BULBO	FASTENING BULB	1	1	2								
	Q412000000	REMACHE TUBULAR 4x8	TUBULAR RIVET 4x8	2	2	4								
8	U915619000	EMBELLECEDOR GUIA BISAGRA	HINGE GUIDE TRIM	2	2	4								
	Q152045000	TORNILLO AMARRE M6X25	FASTENING BOLT M6X25	4	4	4								
10	U010512000	GUIA DE BISAGRA	HINGE GUIDE	2	2	4						12.12.11		
10	12041846	GUIA BISAGRA G700 Y G900	HINGE GUIDE G700 Y G900	2	2	4							12.12.11	
11	U915604000	AMARRE GUIA BISAGRA HORNO	OVEN HINGE GUIDE FASTENING	2	2	4								
	Q221342000	REMACHE EXAGONAL M5	HEXAGONAL RIVET M5	2	2	4								
	Q412000000	REMACHE TUBULAR 4x8	TUBULAR RIVET 4x8	6	6	12								
	Q222042000	REMACHE EXAGONAL ROSCA M6	HEXAGONAL RIVET THREAD M6	4	4	8								

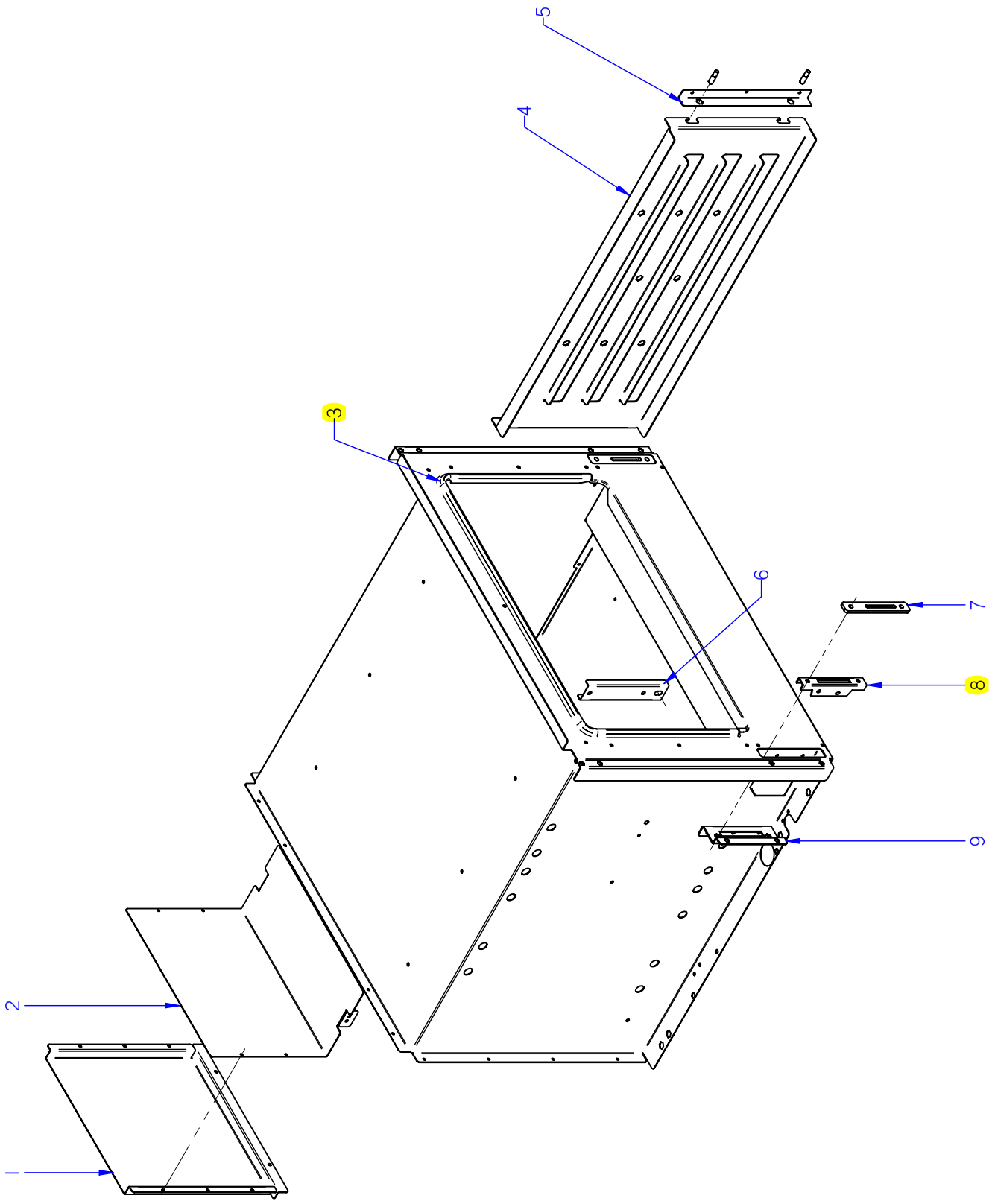

ITEM MARCADO EN COLOR = REPUESTO RECOMENDADO
COLOURED ITEM = RECOMMENDED SPARE PART

Nº plano / N º plane	Firma	Fecha / Date	Denominación / Denomination: HORNO / OVEN	Lamina / Sheet	
C-2867	Irene Berdos	2011-10	COCINA CGE9-41 PLUS	8	Fagor Industrial S.Coop. Oñate FAGOR

MOD.	COCINAS / RANGES	ZONA / ZONE	HORNO / OVEN	PLANO DIAGRAM	C-2867

ITEM	CODIGO REFERENCE	DENOMINACION	DENOMINATION	CGE9-41 PLUS								ELIMINADO ELIMINATED	INTRODUCID. INTRODUCED	NOTAS
1	U965621000	POSTERI. CHIMENEA CGE9-41AD	REAR FLUEPIPE CGE9-41AD	1										
	Q419005000	REMACHE 4x8 ALMG3 / ALUMINIO	RIVET 4X8 ALMG3 / ALUMINIUM	16										
2	U965617000	ANTERIOR CHIMENEA CGE9-41 AD	FRONT FLUEPIPE CGE9-41AD	1										
3	U965613000	JUNTA HORNO FIBRA DE VIDRIO	FURNACE FIBERGLASS BOARD	1										
4	U915607000	GUIA LATERAL HORNO G700	OVEN SIDE GUIDE G700	2										
	Q151336000	TORNILLO SOPORTE GUIAS	GUIDE SUPPORT BOLT	4										
	Q302022000	ARANDELA 16X6X1.2 A.304	WASHER 16X6X1.2 A.304	4										
	Q221321000	REMACHE ROSCAD.NUTSERT.M6	THREADED RIVET .NUTSERT.M6	4										
5	U915616000	SUPLEMENTO AMARRE GUIA LAT.	SIDE GUIDE FAST. SUPPL.	2										
	Q412000000	REMACHE TUBULAR 4x8	TUBULAR RIVET 4x8	6										
6	U055644000	FIJACION BULBO	FASTENING BULB	1										
	Q412000000	REMACHE TUBULAR 4x8	TUBULAR RIVET 4x8	2										
7	U915619000	EMBELLECED GUIA BISAGRA	HINGE GUIDE TRIM	2										
	Q152045000	TORNILLO AMARRE M6X25	FASTENING BOLT M6X25	4										
8	U010512000	GUIA DE BISAGRA	HINGE GUIDE	2								12.12.11		
8	12041846	GUIA BISAGRA G700 Y G900	HINGE GUIDE G700 Y G900	2									12.12.11	
9	U915604000	AMARRE GUIA BISAGRA HORNO	OVEN HINGE GUIDE FASTENING	2										
	Q221342000	REMACHE EXAGONAL M5	HEXAGONAL RIVET M5	2										
	Q412000000	REMACHE TUBULAR 4x8	TUBULAR RIVET 4x8	6										
	Q222042000	REMACHE EXAGONAL ROSCA M6	HEXAGONAL RIVET THREAD M6	4										

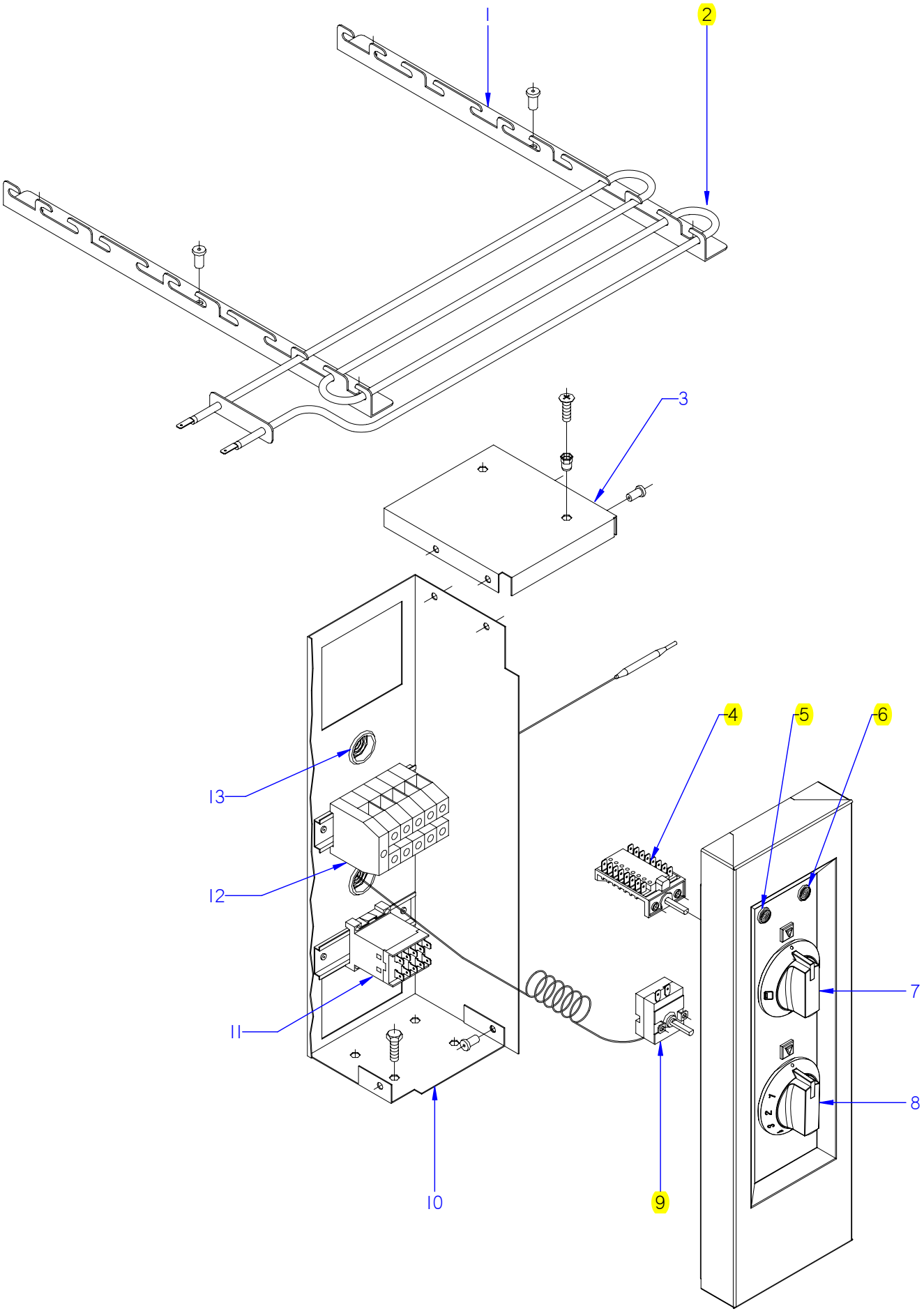

ITEM MARCADO EN COLOR = REPUESTO RECOMENDADO
COLOURED ITEM = RECOMMENDED SPARE PART

Nº plano / N º plane	Firma	Fecha / Date	Denominación / Denomination: PARTE ELECTRICA / ELECTRICS FUNCTIONAL	Lamina / Sheet	
C-2868	Irene Benito	2011-09	COCINA CGE9-41 PLUS	9	Fagor Industrial S.Coop. FAGOR Oñate

MOD.	COCINAS / RANGES	ZONA / ZONE	PARTE FUNCIONAL ELECTRICA ELECTRICS FUNCTIONAL PART	PLANO DIAGRAM	C-2868

ITEM	CODIGO REFERENCE	DENOMINACION	DENOMINATION	CGE9-41 PLUS								ELIMINADO ELIMINATED	INTRODUCID. INTRODUCED	NOTAS
1	U965620000	ESCUADRA SOP. RESISTENCIA AD	SUPP. BRACKET RESISTORS AD	4										
	Q419005000	REMACHE 4x8 ALMG3 / ALUMINIO	RIVET 4X8 ALMG3 / ALUMINIUM	12										
2	U803004000	RESISTENCIA 1000W/230V	RESISTOR 1000W -230V	6										
3	U963003000	TAPA DE CUADRO ELECTRICO AD	ELECTRIC PANEL COVER AD	1										
	Q419005000	REMACHE 4x8 ALMG3 / ALUMINIO	RIVET 4X8 ALMG3 / ALUMINIUM	4										
	Q419005000	REMACHE 4x8 ALMG3 / ALUMINIO	RIVET 4X8 ALMG3 / ALUMINIUM	2										
	Q221342000	REMACHE EXAGONAL M5	HEXAGONAL RIVET M5	2										
	Q012032000	TORNILLO EXAGONAL M5x15 A304	HEXAGONAL BOLT M5x15	2										
	Q012032000	TORNILLO EXAGONAL M5x15 A304	HEXAGONAL BOLT M5x15	2										
4	U673006000	CONMUTADOR	SWITCH	1										
	Q151320000	TORNILLO ALOMADO M4x6 H.ZINC.	CURVED SCREW M4X6 H. ZINC	2										
5	R693055000	PILOTO VERDE 41227000C7	GREEN PILOT 41227000C7	1								01.02.13		
5	12047390	PILOTO VERDE 230V AC 8KW16mm	GREEN PILOT230V AC 8KW16mm	1									01.02.13	
6	R693056000	PILOTO AMBAR	AMBER PILOT	1								01.02.13		
6	12024669	PILOTO AMBAR Ø18	AMBER PILOT Ø18	1									01.02.13	
7	U173006000	MANDO MONTADO CE Ø6	CONTROL CE Ø6	1										
8	U173005000	MANDO CE Ø6 TERMOSTATO	CONTROL Ø6 THERMOSTAT	1										
9	X153000000	TERMOSTATO 50-310º C	THERMOSTAT 50-310 C	1										
	Q151320000	TORNILLO ALOMADO M4x6 H.ZINC.	CURVED SCREW M4X6 H. ZINC	2										
10	U963002000	CUADRO ELECTRICO AD	ELECTRICAL PANEL AD	1										
11	Z213007000	CONTACTOR 3TF2010-3AL2	CONTACTOR 3TF2010-3AL2	1										
	Q419005000	REMACHE 4x8 ALMG3 / ALUMINIO	RIVET 4X8 ALMG3 / ALUMINIUM	4										
12	P453025000	BORNES 10 WDU-10203.0	TERMINALS 10 WDU-10203.0	3										
	U803009000	BORNA PASO AZUL 16 MM.	BLUE TAP TERMINAL 16MM	1										
	P453026000	BORNA TIERRA 10 WPE-10103.0	TERMINAL TIER 10 WPE-10103.O	1										
	12025224	BORNA NEUTRO AZUL 57A 10mm2	TERMINAL NEUTRAL BLUE 57A	1									27,09,12	
	Z263303000	TOPE FINAL	END STOP	1										
	R663055000	GUIA CONTACTOR L-120	CONTACTOR GUIDE L-120	1										
13	X723014000	PASAMUROS AMETRO 30		2										

MOD.	COCINAS / RANGES	ZONA / ZONE	VARIOS / MISCELLANEOUS	PLANO DIAGRAM	

ITEM	CODIGO REFERENCE	DENOMINACION	DENOMINATION	CG9-20 PLUS	CG9-40 PLUS	CG9-60 PLUS	CG9-41 PLUS	CG9-61 PLUS	CG9-82 PLUS	CGE9-41 PLUS		ELIMINADO ELIMINATED	INTRODUCID. INTRODUCED	NOTAS
	U026508000	FOLLETO DE INSTRUCIONES CG	INSTRUCTION LEAFLET CG	1	1	1	1	1	1	1				
	U023001000	ESQUEMA TEORICO ADHESIVO AD	THEOR. DIAGRAM LABEL AD	1	1	1	1	1	1	1				PLANO HB-80558
	U673054000	ESQUEMA TEORICO ADHESIVO	THEOR. DIAGRAM LABEL	_	_	_	_	_	_	1				PLANO HC-76539
	U963006000	CABLE. ENCENDEDOR ENCIMERA	TOP LIGHTER WIRING	1	1	1	_	_	_	_				
	U023002000	CABLEADO TIERRA CG 9-41	CG 9-41 EARTH WIRING	_	1	_	3	_	2	1				
	U023004000	CABLE BUJIA-1º FUEGO:CG9-41	WIRING PLUG-1º FIRE: CG9-41	_	3	2	2	2	4	2		27,09,12		
	U023004000	CABLE BUJIA-1º FUEGO:CG9-41	WIRING PLUG-1º FIRE: CG9-41	_	1	2	1	1	2	1			27,09,12	
	U023005000	CABLE BUJIA-1º,2º FUEGO:CG9-41	WIRING PLUG-1º,2º FIRE: CG9-41	_	_	2	2	2	4	2		27,09,12		
	U023005000	CABLE BUJIA-1º,2º FUEGO:CG9-41	WIRING PLUG-1º,2º FIRE: CG9-41	_	_	1	1	1	2	_			27,09,12	
	U023006000	CABLE BUJIA-4º FUEGO:CG9-41	WIRING PLUG-4 º FIRE: CG9-41	_	1	_	_	2	_	_		27,09,12		
	U023006000	CABLE BUJIA-4º FUEGO:CG9-41	WIRING PLUG-4 º FIRE: CG9-41	_	1	_	2	4	4	_			27,09,12	
	Z603041000	CABLE ALIMENTACION	POWER WIRING	1	1	1	1	1	2	_				
	U333003000	CABLE MASA ENCENDEDOR	LIGHTER EARTH CABLE	2	1	2	1	1	1	1		27,09,12		
	12024296	CABLEADO ENCENDEDOR BUJIA	PLUG LIGHTER WIRING	2	3	3	1	1	2	3			27,09,12	
	U963004000	CABLEADO ENCENDEDOR HORNO	OVEN LIGHTER WIRING	_	_	_	1	1	2	_				
	U963005000	CABLEADO ENCENDEDOR HORNO	OVEN LIGHTER WIRING	_	_	_	1	1	2	1				
	U673008000	CABLEADO HORNO	OVEN WIRING	_	_	_	_	_	_	1				

MOD.	COCINAS / RANGES	ZONA / ZONE	REPUESTOS RECOMENDADOS RECOMMENDED SPARE PART	PLANO DIAGRAM	

ITEM	CODIGO REFERENCE	DENOMINACION	DENOMINATION	CG9-20 PLUS	CG9-40 PLUS	CG9-60 PLUS	CG9-41 PLUS	CG9-61 PLUS	CG9-82 PLUS	CGE9-41 PLUS		ELIMINADO ELIMINATED	INTRODUCID. INTRODUCED	NOTAS
16	U020528000	BISAGRA CIERRE HORNO	OVEN LOCK HINGE	_	_	_	2	2	4	2				C-2861
7	U962668000	CAJA TREN CHISPA 920 SOLD	TRAIN SPARK BOX 920 SOLD	1	_	_	_	_	_	_				C-2864
7	12038838	CAJA TREN CHISPA CG AD	TRAIN SPARK BOX CG AD	_	1	1	_	_	_	_			31,10,11	C-2864
8	X163014000	ENCENDEDOR PARA 2 BUJIAS	LIGHTER FOR 2 PLUGS	1	_	_	_	_	_	_				C-2864
8	U963001000	TREN DE CHISPAS 6	TRAIN SPARKS 6	_	1	1	_	_	_	1				C-2864
10	T723009000	PULSADOR SERIE MICRO	MICRO SWITCH SERIES	1	1	1	_	_	_	1				C-2864
12	U962109000	PILOTO COMPLETO	S140(0140028) PILOT UNIT	2	4	6	_	_	_	4				C-2864
S/Nº	12041740	INYECTOR LPG	INJECTOR LPG	2	4	6	_	_	_	4			23,11,11	C-2864
S/Nº	U962106000	INYECTOR NG	INJECTOR NG	2	4	6	_	_	_	4				C-2864
S/Nº	U962101000	TERMOPAR 1500	THERMOCOUPLE 1500	1	2	3	_	_	_	2				C-2864
S/Nº	U962102000	TERMOPAR 600	THERMOCOUPLE 600	1	2	3	_	_	_	2				C-2864
S/Nº	X012101000	BUJIA 915.037	SPARK PLUG	2	4	6	_	_	_	4				C-2864
S/Nº	S312107000	MANGUITO TUBO PILOTO	PILOT PIPE HOSE	4	8	12	_	_	_	8				C-2864
7	T723009000	PULSADOR SERIE MICRO	MICRO SWITCH SERIES	_	_	_	2	2	4	_				C-2865
9	U962109000	PILOTO COMPLETO	S140(0140028) PILOT UNIT	_	_	_	4	6	8	_				C-2865
S/Nº	12041740	INYECTOR LPG	INJECTOR LPG	_	_	_	4	6	8	_			23,11,11	C-2865
S/Nº	U962106000	INYECTOR NG	INJECTOR NG	_	_	_	4	6	8	_				C-2865
S/Nº	U962101000	TERMOPAR 1500	THERMOCOUPLE 1500	_	_	_	2	3	4	_				C-2865
S/Nº	U962102000	TERMOPAR 600	THERMOCOUPLE 600	_	_	_	2	3	4	_				C-2865
S/Nº	X012101000	BUJIA 915.037	SPARK PLUG	_	_	_	4	6	8	_				C-2865
S/Nº	S312107000	MANGUITO TUBO PILOTO	PILOT PIPE HOSE	_	_	_	8	12	16	_				C-2865
14	U912115000	GRIFO 18700 BY-PASS 0,75	TAP 18700 BY-PASS 0.75	_	_	_	2	3	4	_				C-2865
14	U912109000	GRIFO 18700 BY-PASS 1,15	TAP 18700 BY-PASS 1.15	_	_	_	1	2	2	_				C-2865
14	U912117000	GRIFO 18700 BY-PASS 1,45	TAP 18700 BY-PASS 1.45	_	_	_	1	1	2	_				C-2865
19	U322118000	PILOTO COMPLETO 100.062	COMPLETE PILOT LIGHT 100,062	_	_	_	1	1	2	_				C-2865
S/Nº	U442137000	INYECTOR Ø 0,4 GN	INJECTOR Ø 0.4 GN.	_	_	_	1	1	2	_				C-2865
S/Nº	U562130000	TERMOPAR L=850	THERMOCOUPLE L=850	_	_	_	1	1	2	_				C-2865
S/Nº	X022131000	BUJIA	SPARK PLUG	_	_	_	1	1	2	_				C-2865
	Q012031000	TORNILLO EXAGONAL M5x15 A304	HEXAGONAL BOLT M5x15 A304	_	_	_	2	2	4	_				C-2865

MOD.	COCINAS / RANGES	ZONA / ZONE	REPUESTOS RECOMENDADOS RECOMMENDED SPARE PART	PLANO DIAGRAM	

ITEM	CODIGO REFERENCE	DENOMINACION	DENOMINATION	CG9-20 PLUS	CG9-40 PLUS	CG9-60 PLUS	CG9-41 PLUS	CG9-61 PLUS	CG9-82 PLUS	CGE9-41 PLUS		ELIMINADO ELIMINATED	INTRODUCID. INTRODUCED	NOTAS
20	U134324000	VALVULA MINISIT 0710.654	VALVE MINISIT 0710.654	_	_	_	1	1	2	_				C-2865
S/Nº	Q307041000	JUNTA TORICA 25,4x20,2x2,6	O-RING 25.4x20.2x2.6	_	_	_	2	2	4	_				C-2865
S/Nº	U134317000	MANDO NEGRO MINI 916.124	BLACK CTRL. MINI 916.124	_	_	_	1	1	2	_				C-2865
S/Nº	U134318000	CUBIERTA MINISIT 903.052	COVER MINISIT 903.052	_	_	_	1	1	2	_				C-2865
S/Nº	Q031322000	TORNILLO ALOMADO M4x15	CURVED SCREW M4X15	_	_	_	8	8	16	_				C-2865
S/Nº	U264300000	RACOR 3/8 906,252	CONNECTION 3/8 906.252	_	_	_	2	2	4	_				C-2865
S/Nº	U134323000	RACORD BICONO 6 958.031	BICONE CONNECTION 6 958.031	_	_	_	1	1	2	_				C-2865
24	X163014000	ENCENDEDOR PARA 2 BUJIAS	LIGHTER FOR 2 PLUGS	_	_	_	1	1	2	_				C-2865
26	U963001000	TREN DE CHISPAS 6	TRAIN SPARKS 6	_	_	_	1	1	2	_				C-2865
4	U965613000	JUNTA HORNO FIBRA DE VIDRIO	FURNACE FIBERGLASS BOARD	_	_	_	1	1	2	_				C-2866
10	12041846	GUIA BISAGRA G700 Y G900	HINGE GUIDE G700 Y G900	_	_	_	2	2	4	_			12.12.11	C-2866
3	U965613000	JUNTA HORNO FIBRA DE VIDRIO	FURNACE FIBERGLASS BOARD	_	_	_	_	_	_	1				C-2867
8	12041846	GUIA BISAGRA G700 Y G900	HINGE GUIDE G700 Y G900	_	_	_	_	_	_	2			12.12.11	C-2867
2	U803004000	RESISTENCIA 1000W/230V	RESISTOR 1000W -230V	_	_	_	_	_	_	6				C-2868
4	U673006000	CONMUTADOR	SWITCH	_	_	_	_	_	_	1				C-2868
5	12047390	PILOTO VERDE 230V AC 8KW16mm	GREEN PILOT230V AC 8KW16mm	_	_	_	_	_	_	1			01.02.13	C-2868
6	12024669	PILOTO AMBAR Ø18	AMBER PILOT Ø18	_	_	_	_	_	_	1			01.02.13	C-2868
9	X153000000	TERMOSTATO 50-310º C	THERMOSTAT 50-310 C	_	_	_	_	_	_	1				C-2868

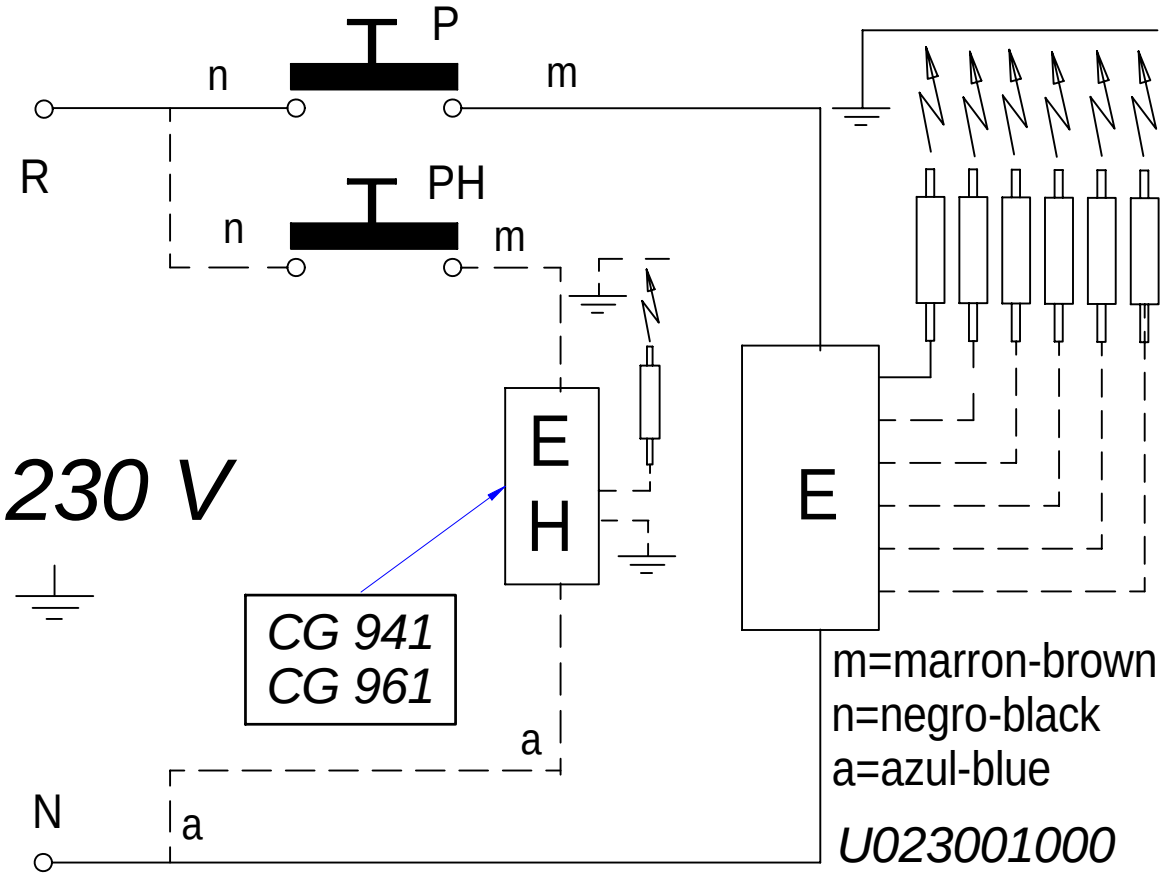

-	**Eskema teorikoa: ADVANCE**	-	-	**U023001000**	-
Zk./Nº	Pieza	Cant.	Materiala/Material	Klas. zk/Nº Clas.	Gainazal akabera/Tratamiento
Zk./Nº	Aldaketa/Modificaciones		Nork proposatua/Propuesta de	Data/Fecha	Perdoi orokorrak Tolerancias generales
-	-		-	-	
-	-		-	-	< 5 ± 0.2 / 50 ÷ 100 ± 0.8
-	-		-	-	5 ÷ 25 ± 0.4 / >100 ± 1
-	-		-	-	25 ÷ 50 ± 0.6 / α ± 1
-	-		-	-	

	Sinadura/Firma	Data/Fecha		Gainazal perdoia Mecanizado superficial
Marraztua/Dibujado	**e.carrascal**	**2008-11-25**	FAGOR Fagor Industrial,Koop.Elk, Mugatua	—
Proiektatua/Proyectado	**e.carrascal**	**2008-11-25**		
Egiaztatua/Comprobado	I.Alberdi	**2008-11-25**		
Eskala/Escala -	**EGOSKETA**			Plano Zk./Plano Nº HB-80558
				- Zk. ord. du
	Plano hau ezin daiteke erabili, ez berriztatu, gure baimenik gabe.			- Zk.gaitik ord.

HE9-10

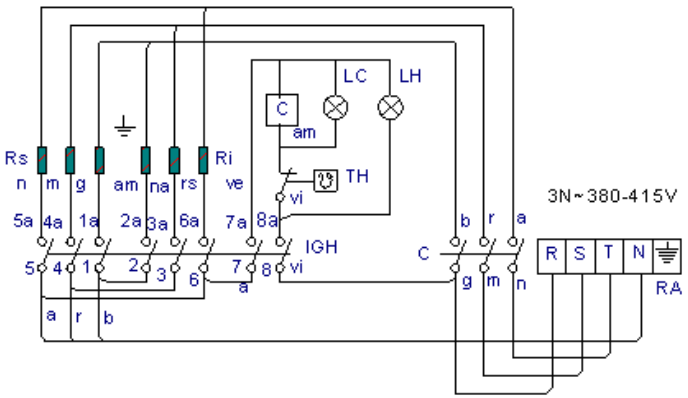

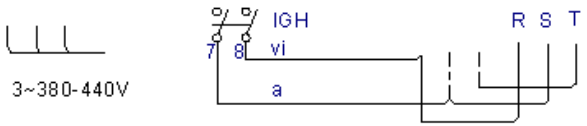

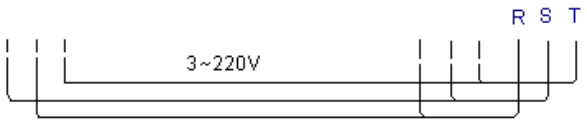

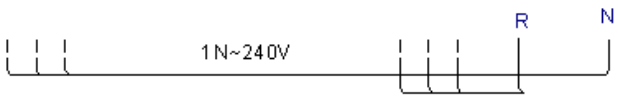

RA: Regleta de Alimentacion

IGH :Conmutador General Horno

C: Contactor

LC : Lampara Calentamiento Horno

LH: Lampara Horno Encendido

TH : Termostato de Horno

Rs : Resistencia Horno Superior

Ri : Resistencia Horno Inferior

r = rojo-red-rouge
m = marron-brown-marron
g = gris-grey-gris
n = negro-black-noir
a = azul-blue-bleu
b = blanco-white-blanc
vi = violeta-violette-violet
am = amarillo-yellow-jaune
na = naranja-orange-orange
rs = rosa-rose-pink
ve = verde-green-vert
am/ve = amarillo/verde-yellow/green-jaune/vert

	1 _ 2 1a 2a	3 _ 4 3a 4a	5 _ 6 5a 6a	7 7a	8 8a
0					
1	X	X	X	X	X
2	X	X	X	X	X
3		X	X	X	X

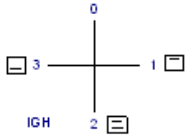

U673054

	Esquema teorico adhesivo			U-673054000		
N°	Pieza	Cant.	Material	N° Clasificacion	Acabado	
N°	Modificacion		Propuesta de	Fecha	Tolerancias generales	
					<3±	50–100± :
					5–25± :	>100±
					25–50± :	<±±

	Firma	Fecha
Dibujado	Munalib	01-11-2002
Proyectado		
Comprobado		

FAGOR

Fagor Industrial,Koop.Elk, Mugatra

Mecanizado superficial

Escala 1/1

COCINAS HE9-10

Plano numero HC-76539

Sustituye al N°

Sustituido por

Nino Ionez dalle reali ez bentdagure kalendizgale

Simb/LENG		ESPAÑOL	ENGLISH	FRANÇAIS	DEUTSCH	ITALIANO
C1, C2	=	Contactor Calentamiento	Contacteur Chauffe	Heating Contactor	Heizschütz	Contatore Riscaldamento
CN	=	Control de Nivel de agua	Control of water Level	Commande de niveau d'eau	Steuerung des Wasserspiegeles	Controllo del livello d'acqua
E	=	Generador de Chispa	Spark generator	Générateur d'étincelle	Funkengenerator	Generatore della scintilla
IB	=	Micro tope bajada	Microswitch of lowered Limit	Microcontact de la limite abaissée	Mikroschalter der gesenkten Begrenzung	Microinterruttore del limite abbassato
IG	=	Interruptor general	General switch	Commutateur général	Allgemeiner Schalter	Interruttore generale
IGV	=	Interruptor electrovalvulas de agua	Switch electrovalvula water	Commutez l'eau d'electrovalvula	Schalten Sie electrovalvula Wasser	Commuti l'acqua di electrovalvula
IE	=	Pulsador de Encendido	Ignition Switch	Commutateur d'allumage	Zündung-Schalter	Interruttore di accensione
IMB	=	Pulsador bajada	lowered switch	commutateur abaissé	gesenkter Schalter	interruttore abbassato
IMS	=	Pulsador subida	Raised switch	Commutateur augmenté	Angehobener Schalter	Interruttore sollevato
IP	=	Micro seguridad	security microswitch	microcontact de sécurité	Sicherheitsmikroschalter	microinterruttore di sicurezza
IS	=	Micro tope subida	Microswitch of rise Limit	Microcontact de la limite d'élévation	Mikroschalter der Aufstieg Begrenzung	Microinterruttore del limite di aumento
L1	=	Lámpara marcha	Operation Light	Lumière d'opération	Betriebs-Licht	Luce di funzionamento
L2	=	Lámpara calentamiento	Heating Light	Lumière de chauffage	Heizungs-Licht	Luce del riscaldamento
M	=	Motor de elevacion	Motor of elevation	Moteur d'altitude	Motor des Aufzugs	Motore dell'altezza
P	=	Presostato de Camara	Water Level Switch	Commutateur de niveau d'eau	Wasserspiegel-Schalter	Interruttore del livello d'acqua
PR	=	Puente rectificador	Electrical bridge rectifier	Pont redresseur électrique	Elektrischer Brückengleichrichter	Raddrizzatore a ponte elettrico
R	=	Resistencia Calentamiento.	Résistance Chauffe	Heating Resistors	Widerstand Aufheizung	Resistenza Riscaldamento
RE	=	Regulador Energia	Regulator of Energy	Régulateur d'énergie	Regler von Energie	Regolatore di energia
T	=	Termostato	Thermostat	Thermostat	Thermostat	Termostato
TRF	=	Transformador	Transformer	Transformateur	Transformator	Trasformatore
TS	=	Termostato de seguridad	Security Thermostat	Thermostat de sécurité	Sicherheits-Thermostat	Termostato di sicurezza
TRP	=	Termopar	Thermocouple	Thermocouple	Thermoelement	Termocoppia
VG1,VG2	=	ElectroVálvula gas	Electrical gas valve	Clapet à gaz électrique	Elektrisches Gichtventil	Valvola a gas elettrica
V1	=	Valvula Agua CALIENTE	ElectroValve of Hot Water	Électrovalve d'eau chaude	Elektroventil des Heißwassers	Elettrovalvola di acqua calda
V2	=	Valvula Agua FRIA	ElectroValve of cold Water	Électrovalve d'eau froide	Elektroventil des kalten Wassers	Elettrovalvola di acqua fredda
V3	=	Valvula Agua Caldera	electrovalve of water boiler	électrovalve de chauffe-eau	Elektroventil des Warmwasserboilers	elettrovalvola del reattore ad acqua
	=	**COLORES**	**COLOUR**	**COULEURS**	**FARBEN**	**COLORE**
a	=	Azul	Blue	Bleu	Blau	Blu
am	=	Amarillo	Yellow	Jaune	Gelb	Giallo
am/ve	=	Amarillo/verde	Yellow / green	Jaune / vert	Gelb/grün	Giallo/verde
b	=	Blanco	White	Blanc	Weiß	Bianco
g	=	Gris	Grey	Gris	Grau	Grigio
m	=	Marrón	Brown	Marron	Braun	Marrone
n	=	Negro	Black	Noir	Schwarz	Nero
na	=	Naranja	Orange	Orange	Orange	Arancio
r	=	Rojo	Red	Rouge	Rot	Rosso
rs	=	Rosa	Pink	Rose	Rosa	Roseo
ve	=	Verde	Green	Vert	Grün	Verde
vi	=	Violeta	Purple	Violet	Violett	Viola
						X463007000