G9001

CATALOGO RICAMBI
SPARE PARTS CATALOGUE
CATALOGUE PIECES DETACHEES
ERSATZTEILKATALOG
CATALOGO DE PIEZAS DE RECAMBIO

CG9N020T
CG9N020C
CG9N040T
CG9N040C
CG9N040F
CG9N040FE
CG9N162T
CG9N162C
CG9N162FA
CG9N162FEA
CG9N182F

TAVOLA 1

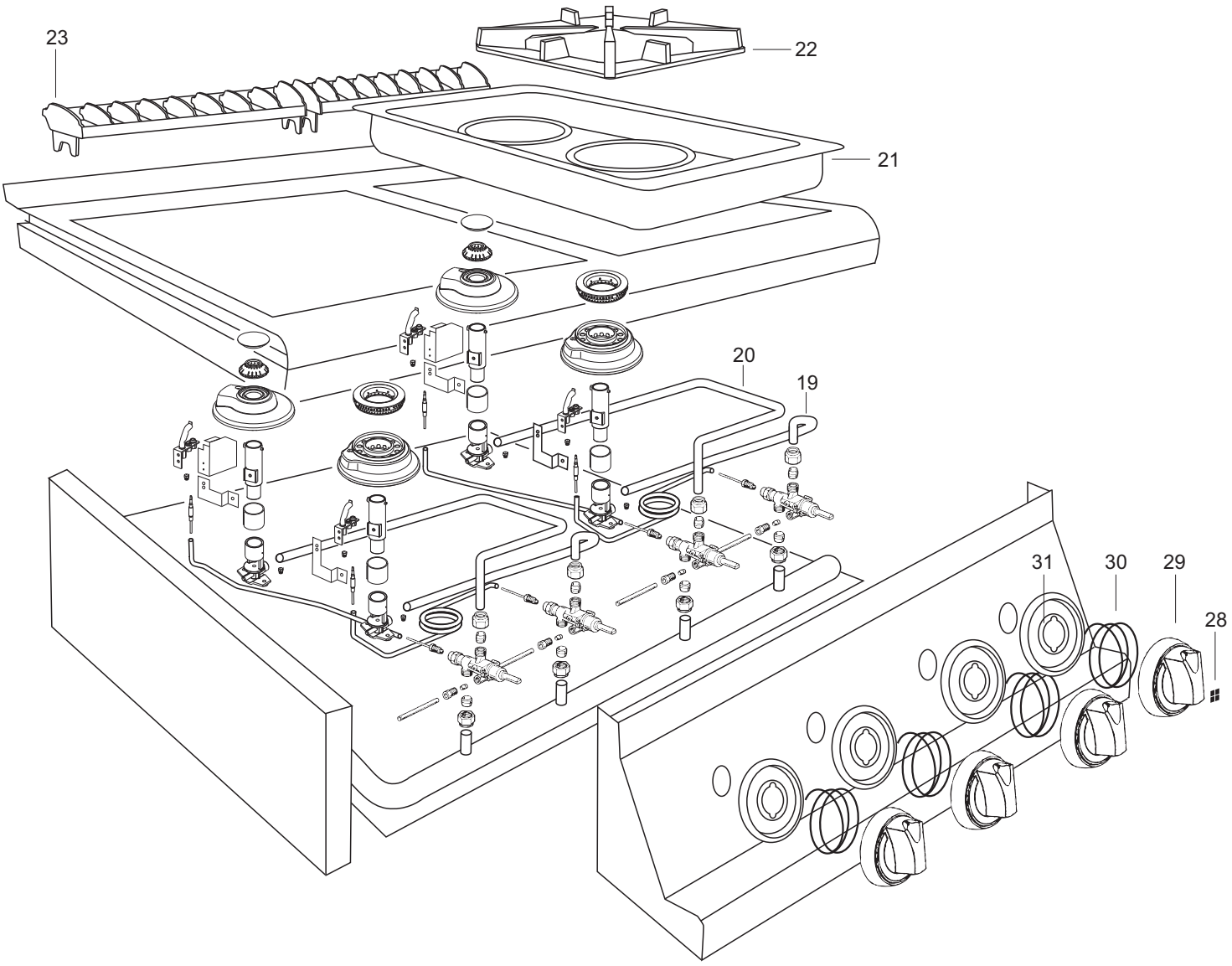
23
22
21
20
19
31
30
29
28

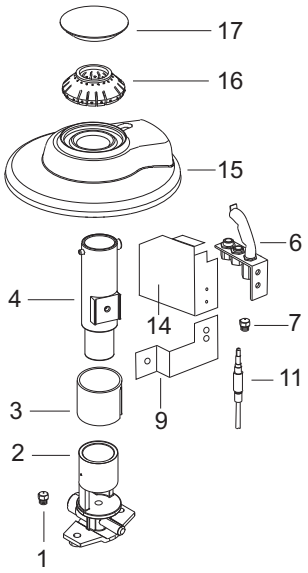
17
16
15
6
4
14
7
11
3
9
2
1

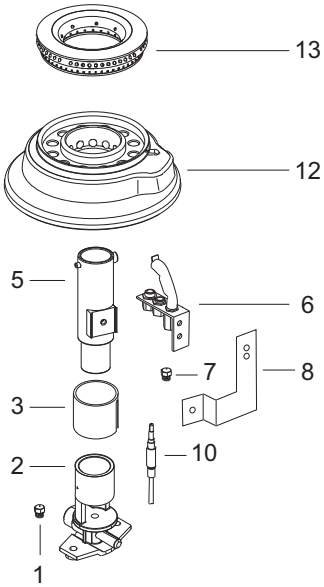
13
12
5
6
7
8
3
10
2
1

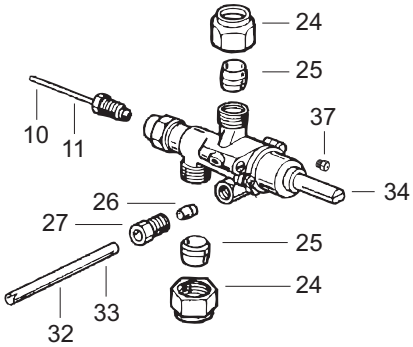
24
25
10
11
37
34
26
27
25
24
32
33

Listino componenti per pagina 1

1	UGELLO	VEDI TABELLA UGELLI MANUALE ISTRUZ. VOIR FICHIER DES INJECTEURES SEE NOZZLE TABLE SIEHE DÜSEN TABELLE	
2	241202412	PORTA UGELLO (LAVORATO) PORTE GICLEUR NOZZLE HOLDER DUESENHALTER	
3	741312350	AEREATORE PER BRUCIATORE RACCORD DE REGLAGE DE L'AIR AIR REGULATION SLEEVE LUFTREGULIERHUELSE	
4	270200170	TUBO VENTURI TUBE VENTURI VENTURI TUBE VENTURIROHR	
5	790341600	TUBO VENTURI DM.22 FUOCHI TUBE VENTURI DM.22 VENTURE TUBE DM.22 VENTURIROHR DM. 22	
6	A00407 *Recommended spare parts*	ASS. PILOTA CUCINE GAS VEILLEUSE FEUX VIFS PILOT FOR OPEN BURNERS ZUNDFLAMMENBRENNERSATZ	
7	UGELLO	VEDI TABELLA UGELLI MANUALE ISTRUZ. VOIR FICHIER DES INJECTEURES SEE NOZZLE TABLE SIEHE DÜSEN TABELLE	
8	711309770	SUPP. PILOTA BRUC. D-C. GRANDE SUPP.VEILLEUSE BRULEURE GRANDE DOUBLE COURONNE PILOT FOR BURNER ZUNDFLAMM.HAELTER.GROSSEN BRENNER	
9	770336640	SUPP. PILOTA BRUC. GRANDE R.+TP 1/2 SUPP.VEILLEUSE BRULEUR GRANDE RAPIDE PILOT FOR BURNER ZUNDFLAMM.HAELTER.GROSS SCHNELLBRE	
10	434008060 *Recommended spare parts*	TERMOCOPPIA TARGHET M8X1 L=600 THERMOCOUPLE M8X1 L= 600 MM THERMOCOUPLE M8X1 L= 600 MM THERMOELEMENTE M8X1 L= 600 MM	
11	A00426 *Recommended spare parts*	ASS. TERMOCOP. TARGET M9X1 THERMOCOUPLE L=1000 M9X1+RACCORD M8 THERMOCOUPLE L=1000 M9X1+CONNEC.M8 THEERMOEL.L=1000 M9X1 VERBINDUNG M8	
12	A00504	ASS. BRUC.S-900 ASS.BRULEURE S-900 BURNER ASSEMBLY S-900 BRENNER S-900	
13	290204930	COPER. BRUC.GRANDE D.COR.C/F.DM.3,5 COUVERCLE BRULEURE GRANDE D.C. LID FOR BIG BURNER BRENNERDECKE, GROSS	
14	770335110	PROTEZIONE PILOTA PROTECTION VEILLEUSE PROTECTION PILOT ZUNDFLAMME SCHUTZ	
15	770336750	BASE BRUC. GRANDE RAPIDO F.A. BASE BRULEUR GRANDE RAPIDE BURNER TYPE D BRENNERUNTERSATZ MITTEL SCHNELLTYPD	

16	270204240	SPARTIFIAMMA BRUC. GRANDE RAPIDO TETE BRUL.GRANDE RAPIDE FLAME SPRADER BIG RAPID BURNER FLAMMENVERTEILER TYP D MITTEL	
17	290200480	COPERCHIO BRUC.GRANDE RAPIDO COUVERCLE DE GRAND BRULEUR LID OF LARGE BURNER BRENNERDECKEL	
19	A00505	ASS.CONDUTT.RUB.BRUC.GRANDE D.C.ANT ASS.TUYAU ROB.BRUL.GRAND D.C. PIPE ASS.FOR LARGE BURNER R.H.COCK MEHRFACHSTELLGER LEITUNG GROSS.BREN	
20	A00506	ASS.CONDUTT.RUB.BRUC.POST. ASS.TUYAU ROB.BRUL.POST. PIPE ASS.FOR BACK BURNER COCK MEHRFACHSTELLGER LEITUNG HINT.BREN	
21	290342210	BACINELLA BASSA RACC.GOCCE INOX COUVETTE INOX THIN S/S SPILLAGE TRAY NIED.WASSER CNS AUFFANGSBEHAELTER	
22	290204940	GRIGLIA FUOCHI ALTA DI GHISA GRILLE EN FONTE IRON PAN SUPPORT GUSEISEN STERNROST	
23	270205480	GRIGLIA DI GHISA SCARICO FUMI PIANO GRILLE EN FONTE EVACUATION FUMES CAST IRON GRID F.FUMERISER GUSSEISEN ROST FUER ABGASE	
24	270201590	DADO PER BICONO DM.10 ECROU POUR BICONE DIAM.10 NUT FOR NOSE CONE DIAM. 10 MUTTER FUER BICONE DURCHM. 10	
25	270201600	BICONO DM.10 RACCORD BICONE DIAM.10 NOSE CONE DIAM.10 BICONE DIAM.10	
26	241204740	BICONO 4/S PER TUBO DM.4 BICONE 4/S POUR TUYAU DIAM.4 NOSE CONE 4/S FOR PIPE DIAM.4 MUTTER 4/S FUR ROHR D.4	
27	4392040	RACCORDO PER BICONO D4 M10X1 RACCORD POUR BICONE D4 M10X1 JOINT FOR NOSE CONE D4 M10X1 VERBIENDUNG FUER BICONE D4 M10X1	
28	LOGO	LOGO PER MANOPOLA LOGO POUR BOUTON LOGO FOR KNOBS LOGO FÜR KNEBEL	
29	770124670 *Recommended spare parts*	ASS. MANOP.GAS PICC. C/PILOTA STYLE ASS.BOUTON GAZ PETIT AV/VEILLEUSE SMALL GAS KNOB ASS. W/PILOT KNEBEL F.GASHERD KLEIN M/ZUNDFLAMM	
30	290202430 *Recommended spare parts*	MOLLA PER MANOPOLA RESSORT DE BOUTON KNOB SPRING KNEBELFEDER	
31	290204920 *Recommended spare parts*	BORCHIA PER MANOPOLA BLU ANNEAU POUR BOUTON BLEU BLUE RING FOR GAS KNOB BLAUEN RING FUER KNEBEL	

32	A00507	ASS.CONDUTT.RUB.PILOTA ANT. ASS.TUYAU ROBINET VEILLEUSE ANT. PIPE ASS.FOR FRONT PILOT COCK MEHRFACHSTELLGER LEITUNG VORD.BREN	
33	A00508	ASS.CONDUTT.RUB.PILOTA POST. ASS.TUYAU ROBINET VEILLEUSE POS. PIPE ASS.FOR BACK PILOT COCK MEHRFACHSTELLGER LEITUNG HINT.BRENN	
34	435210 *Recommended spare parts*	RUBINETTO GAS VALVOLATO 21 S ROBINET GAZ 21S GAS COCK 21S MEHRFACHSTELLGER AET 21S	
37	BY PASS	VEDI TABELLA BY PASS MANUALE ISTRUZ VOIR FICHIER DES BY PASS SEE BY PASS TABLE SIEHE BY PASS TABELLE	

TAVOLA 2

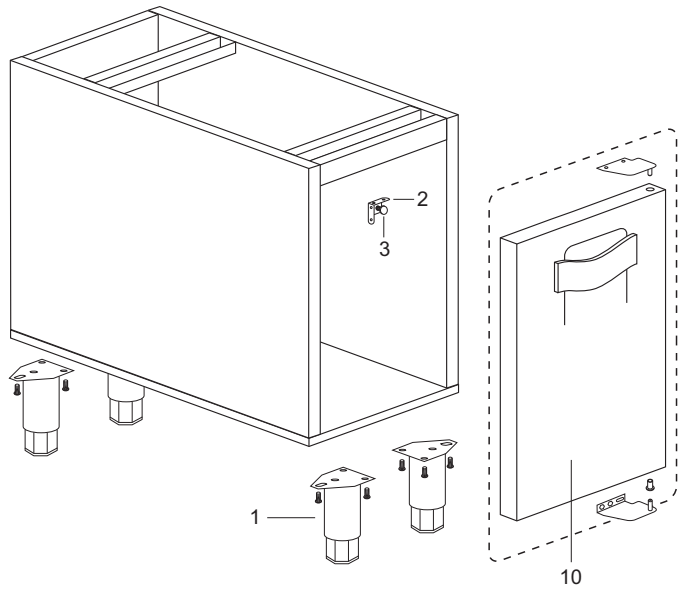

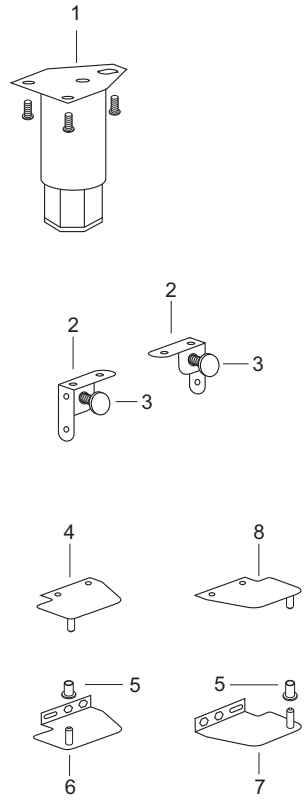

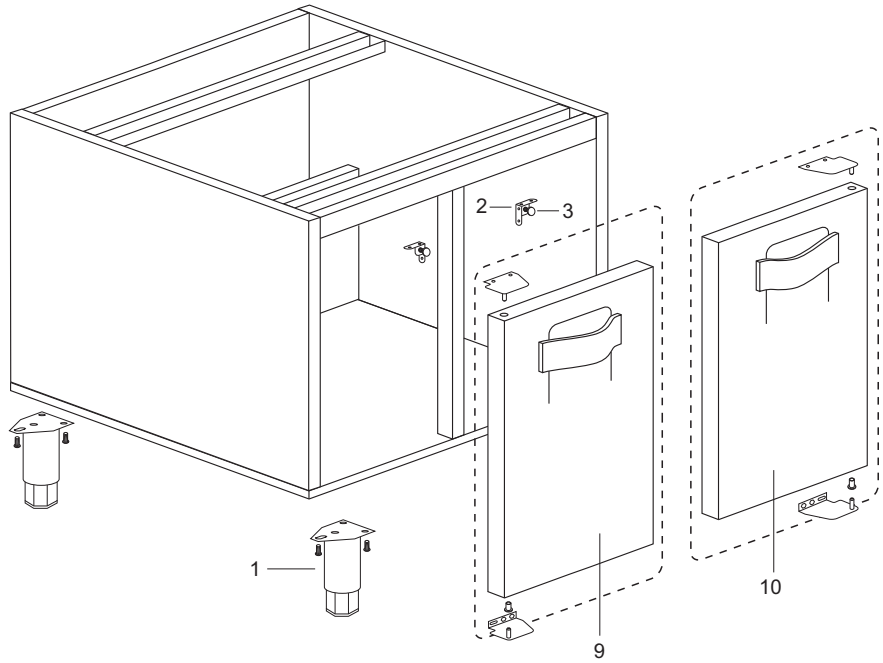

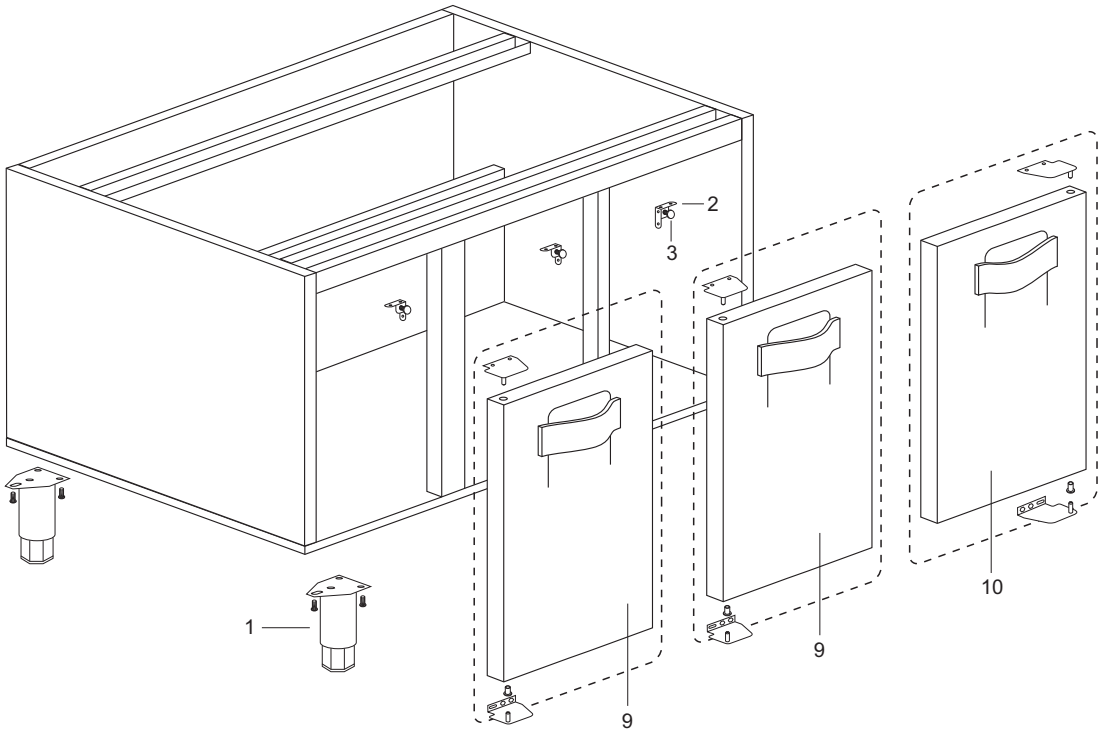

Listino componenti per pagina 2

1	290120510	ASS. PIEDE FLANG. DM.58 REG.95-160 ASS. PIED FLANG.REGABLE 9 DM.58 FLANGED FOOT ASS. DM.58 REG.9 GEFLANSCHTER FUSS DM.58 REG.9	
2	770346560	*ES*SUPP. CALAMITA DM.22 SUPP. AIMANT DM.22 UPPER MAGNET DM.22 OBEREN MAGNET DM.22	
3	4198808	CALAMITA 22X3 GAMBO M6X10 AIMANT 22X3 - M6X10 MAGNET 22X3 - M6X10 MAGNET 22X3 - M6X10	
4	770112490	ASS. CERNIERA SUPERIORE SX SUPP. CHARNIERE SUP. GAUCHE LEFT UPPER HINGE ASS. LINKE OBERE SCHARNIER	
5	741201310	BOCCOLA PER CERNIERA PORTINA BOUCLE POUR CHARN. PORTE BUSHING FOR DOOR HINGE BÜCHSE FÜR TÜR SCHARNIER	
6	770116510	ASS. CERNIERA INF. SX ARM. ASS. CHARN.INFER. GAUCHE ARMORE LEFT BOTTOM HINGE ASS.F.CUPBOARD LINKE UNTERE SCHARNIER F.SCHRANK	
7	770116520	ASS. CERNIERA INF. DX ARM. ASS. CHARN.INF. DROITE ARM. RIGHT BOTTOM HINGE ASS.F.CUPBOARD RECHTE UNTERE SCHARNIER F.SCHRANK	
8	770112450	ASS. CERNIERA SUPERIORE DX ASS.CHARNIERE SUPER.DROITE RIGHT UPPER HINGE ASS. RECHTE OBERE SCHARNIER	
9	A00518	ASS.PORTINA SX ARMADIO NEUTRO STYLE ASS. PORTE GAUCHE PLACARD NEUTRE LEFT DOOR ASS.F.NEUTRAL CABINET LINKE TÜR FÜR NEUTRALSCHRANK	
10	A00517	ASS.PORTINA DX ARMADIO NEUTRO STYLE ASS. PORTE DROITE PLACARD NEUTRE RIGHT DOOR ASS.F.NEUTRAL CABINET RECHTE TÜR FÜR NEUTRALSCHRANK	

TAVOLA 3

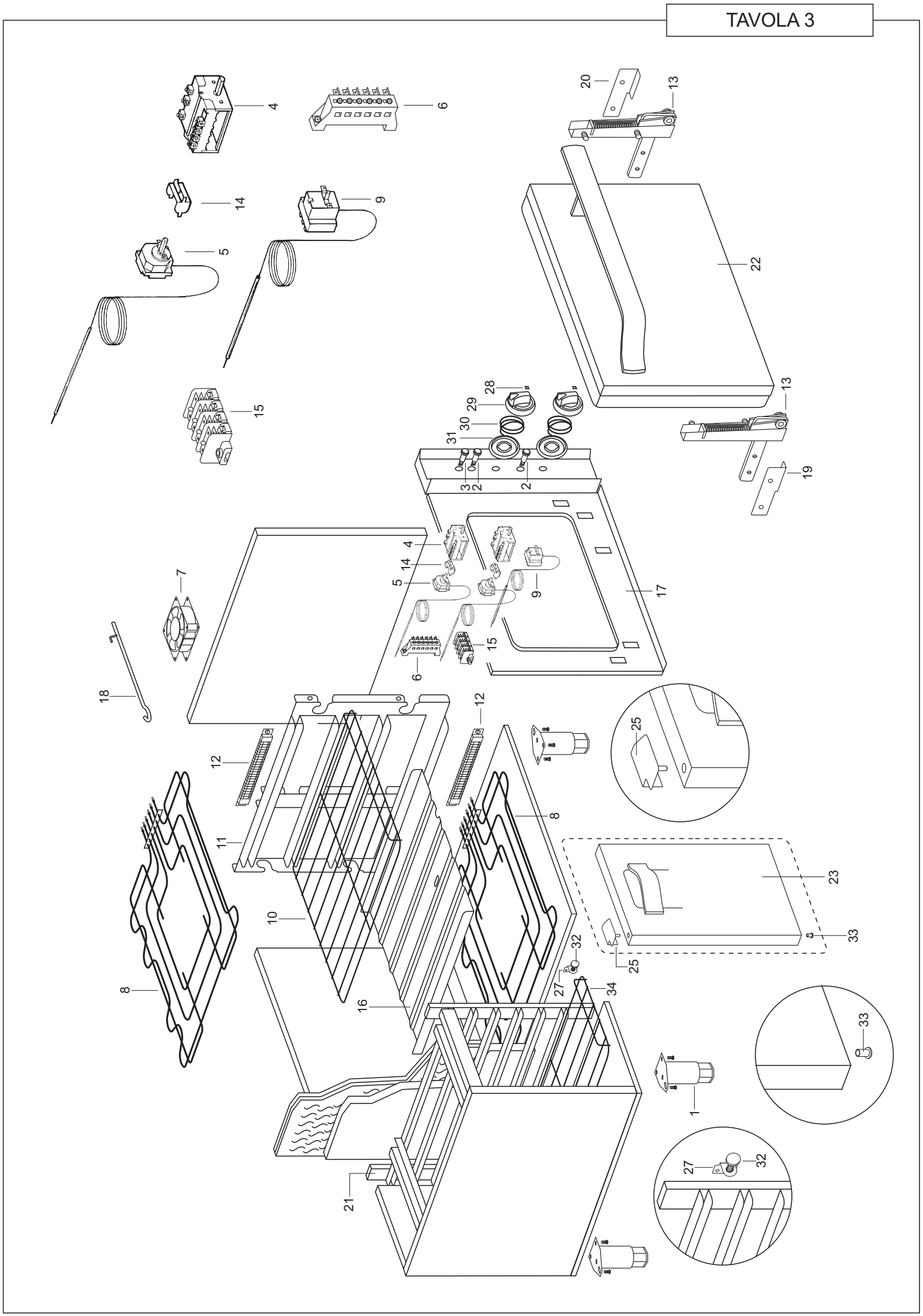
4
6
20
13
14
9
5
22
28
29
30
31
13
15
3
2
2
19
4
14
5
9
17
7
15
6
18
12
25
12
8
11
23
10
33
32
25
27
34
8
16
33
1
27
32
21

Listino componenti per pagina 3

1	290120510	ASS. PIEDE FLANG. DM.58 REG.95-160 ASS. PIED FLANG.REGABLE 9 DM.58 FLANGED FOOT ASS. DM.58 REG.9 GEFLANSCHTER FUSS DM.58 REG.9	
2	A00410 *Recommended spare parts*	ASS. LAMPADINA SPIA ARANCIO VOYANT ORANGE ORANGE PILOT LIGHT ORANGENE SIGNALLEUCHTE	
3	A00409 *Recommended spare parts*	ASS. LAMPADINA SPIA VERDE VOYANT VERT GREEN PILOT LIGHT GRUNE SIGNALLEUCHTE	
4	52004115 *Recommended spare parts*	INTERUTTORE EGO TRIFASE INTERRUPTEUR TRIPHASE THREE-PHASE SWITCH DREIPHASIGER SCHALTER	
5	53403050390 *Recommended spare parts*	TERMOSTATO TRIFASE 50-270°C THERMOSTAT TRIPHASE 50-270°C THREE-PHASES THERMOSTAT 50-270°C DREIPHASIGER THERMOSTAT 50-270°C	
6	652501	MORSETTIERA FV 173 BOITE A BORNES FV 173 TERMINAL BOARD FV 173 KLEMMKASTEN FV 173	
7	607008	ASPIRATORE ASPIRATEUR EXHAUSTER LUFTABSAUGER	
8	290203720 *Recommended spare parts*	RESIST. CORAZ. FORNO 3275W 400V RESISTANCE ELEC. FOUR 3275W 400V OVEN HEATING ELEMENT 3275W 400V HEIZWIDERSTAND OFEN 3275W 400V	
9	53403000350 *Recommended spare parts*	TERMOSTATO SIC. TRIFASE 350°C THERM. DE SECURITE TRIPH. 350 C THREE-PH. SAFETY THERM. 350 C DREIPH. SICHERHEITSTHERM. 350 C	
10	241200292	GRIGLIA FORNO S/900 GRILLE POUR FOUR GN2/1 WIRE OVEN SHELF GN 2/1 BACKOFENROST GN2/1	
11	A00531	ASS.GUIDA FORNO CON PERNI(SMALTATA) ASS. GLISSIERE FOUR AVEC PIVOT ENAMELLED OVEN TRAY SLIDE ASS. WITH PIVOT EMAILIERTEN SCHIENENPAAR SATZT MIT BOLZEN	
12	790325530	PROTEZIONE BULBO PROTECTION BULBE BULB PROTECTION KOLBEN SCHUTZ	
13	A00006 *Recommended spare parts*	ASS.CERNIERA PORTINA FORNO CHARNIERE DE PORTE(LA PAIRE) DOOR HINGE (1 PAIR) TUERSCHARNIERE,PAAR	
14	5200995	FLANGIA AGGANCIO EGO PLATINE D'ACCROCHEMENT EGO COUPLING FLANGE KUPPLUNGSFLANSCH	
15	A00532	ASS.MORSETTIERA PA80 F/F 4 ELEMENTI ASS.BOITE A BORNES PA80 F/F 4 ELEM. TERMINAL BOARD ASS. PA80 KLEMMKASTEN SATZ PA80 F/F 4 ELEM.	

16	790338010	ES*SUOLA FORNO INTERA_ SOLE ENTIERE FOUR BASE PLATE BACKOFENBODEN	
17	A00533	ASS.FACCIATA FORNO ELE ASS.CADRE FRONTAL FOUR ELECTRIQUE ELEC.OVEN FRAME ASS. EL. OFEN VORDEREN RAHMENSATZ	
18	241200300	LEVERINO PER SUOLA LEVIER POUR SOLE FOUR LEVER FOR OVEN BASE PLATE HEBEL FÜR OFEN	
19	770347580	ANGOLARE SX FERMO PORTA FORNO PLATINE GAUCHE FERME PORTE FOUR LH ANGEL FOR OVEN DOOR LINKEN ECKELEMENT FÜR OFEN TÜR	
20	770347570	ANGOLARE DX FERMO PORTA FORNO PLATINE DROITE FERME PORTE FOUR RH ANGEL FOR OVEN DOOR RECHTEN ECKELEMENT FÜR OFEN TÜR	
21	790120320	ASS. GUIDE ARMADIO 6-F + F. ASS.GLISSIERES ARMOIRE 6 FEUX+FOUR CUPBOARD RUNNERS ASS. SCHIENENPAAR SATZ FÜR SCHRANK	
22	A00534	ASS.PORTA FORNO STYLE CON MANIGLIA ASS. PORTE FOUR AVEC POIGNE OVEN DOOR NEW STYLE ASS.W/HANDLE OVEN TÜR MIT GRIFF	
23	A00543	ASS.PORTINA SX ARMADIO FORNO STYLE ASS.PORTE GAUCHE ARMOIRE FOUR L.H. CUPBOARD DOOR ASS. LINKE TUR NEBEN OFEN NEW STYLE	
25	750100440	ASS.CERNIERA INF.DX. ASS.CHARNIERE INF. DROITE R.H. BOTTOM HINGE ASS. RECHTE UNTERE SCHARNIEREN SATZ	
27	770346600	SUPP. CALAMITA DM.22 A.1/2 C/FORNO SUPP. AIMANT DM.22 AR.400MM AV/FOUR MAGNET SUPPORT DM. 22 MAGNET HÄLTERUNG DM 22	
28	LOGO	LOGO PER MANOPOLA LOGO POUR BOUTON LOGO FOR KNOBS LOGO FÜR KNEBEL	
29	770124780 *Recommended spare parts*	ASS. MAN.EL.TERM.50-300°C 3-F STYLE ASS.BOUTON EL.TERM.50-300 C° THERMOST.KNOB ASS. 50-300 C° THERMOSTAT.KNEBEL 50-300 C°	
30	290202430 *Recommended spare parts*	MOLLA PER MANOPOLA RESSORT DE BOUTON KNOB SPRING KNEBELFEDER	
31	290204920 *Recommended spare parts*	BORCHIA PER MANOPOLA BLU ANNEAU POUR BOUTON BLEU BLUE RING FOR GAS KNOB BLAUEN RING FUER KNEBEL	
32	4198808	CALAMITA 22X3 GAMBO M6X10 AIMANT 22X3 - M6X10 MAGNET 22X3 - M6X10 MAGNET 22X3 - M6X10	

33	741201310	BOCCOLA PER CERNIERA PORTINA BOUCLE POUR CHARN. PORTE BUSHING FOR DOOR HINGE BÜCHSE FÜR TÜR SCHARNIER	
34	270200221	GRIGLIA ARMADIETTO S.700 GRILLE POUR ARMOIRE S-700 WIRE CUPB. SHELF S-700 SCHRANKEINLEGEROST FÜR S/700	

TAVOLA 4

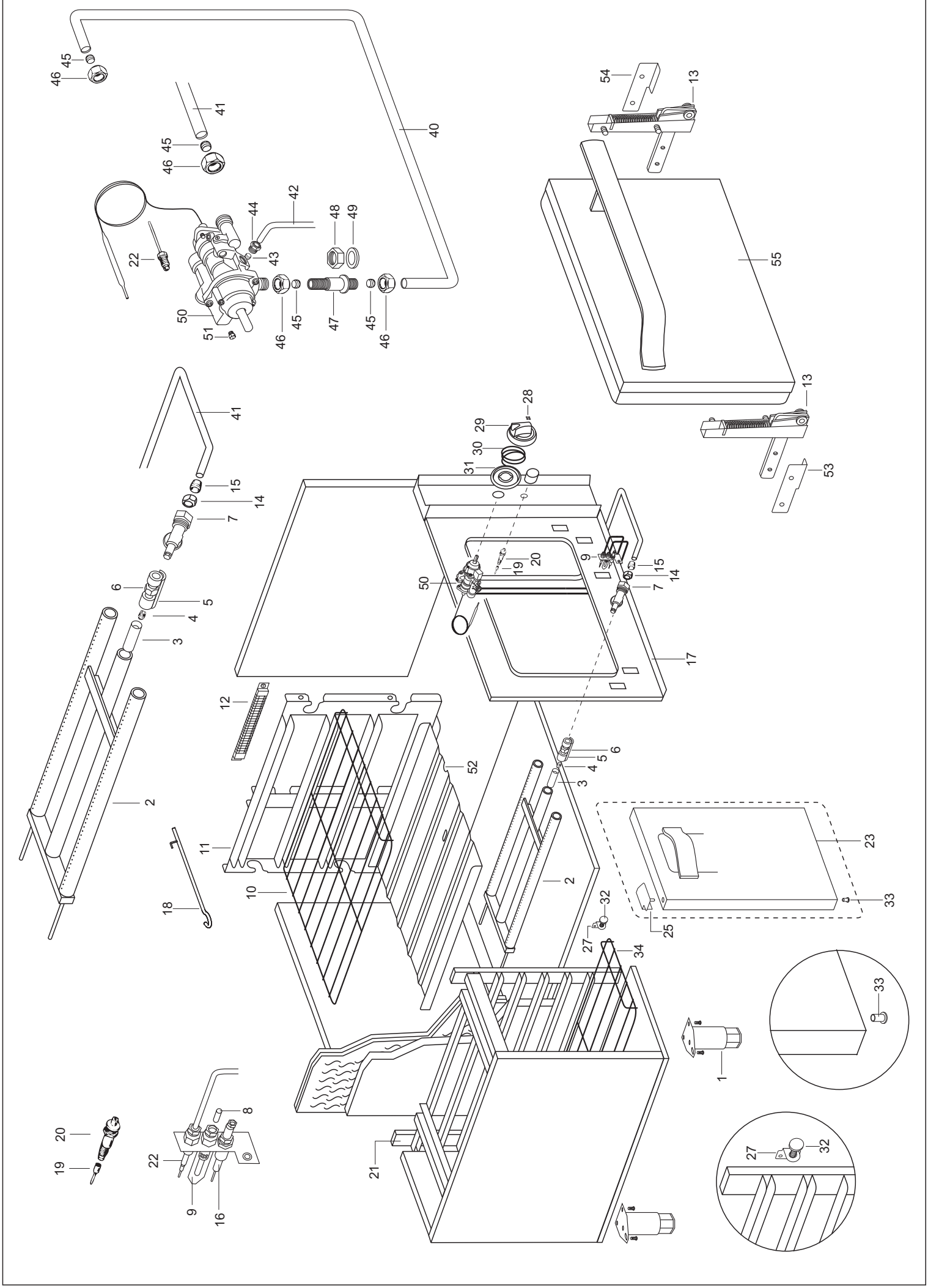

1
2
3
4
5
6
7
8
9
10
11
12
13
14
15
16
17
18
19
20
21
22
23
25
27
28
29
30
31
32
33
34
40
41
42
43
44
45
46
47
48
49
50
51
52
53
54
55

Listino componenti per pagina 4

1	290120510	ASS. PIEDE FLANG. DM.58 REG.95-160 ASS. PIED FLANG.REGABLE 9 DM.58 FLANGED FOOT ASS. DM.58 REG.9 GEFLANSCHTER FUSS DM.58 REG.9	
2	790117170	ASS. BRUCIATORE FORNO S-900 ASS.BRULEURE FOUR S-900 OVEN BURNER ASS. 900 S OFEN BRENNER SATZ S-900	
3	770328740	TUBO VENTURI LAVORATO TUBE VENTURI OUVRE VENTURI TUBE BEARBEITET VENTURIROHR	
4	UGELLO	VEDI TABELLA UGELLI MANUALE ISTRUZ. VOIR FICHIER DES INJECTEURES SEE NOZZLE TABLE SIEHE DÜSEN TABELLE	
5	770107150	ASS. GUIDA VENTURI ASS.CONDUC.VENTURI VENTURI SLIDE ASS. VENTURI LEITUNG SATZ	
6	270200540	DADO M14 PER PORTAUGELLO ECROU POUR PORTE VEILLEUSE NUT M14 FOR NOZZLE SUPPORT MUTTER M14 FUER DUESENHALTERUNG	
7	A00024	ASS.GOMITO 90° RACCORD COUDE 90° 90° ELBOW WINKELSATZ 90°	
8	UGELLO	VEDI TABELLA UGELLI MANUALE ISTRUZ. VOIR FICHIER DES INJECTEURES SEE NOZZLE TABLE SIEHE DÜSEN TABELLE	
9	436201 *Recommended spare parts*	PILOTA TIPO 526FSUF4 VEILLEUSE 526GDUG4 PILOT BURNER 526GDUG4 ZUENDFLAMMENBRENNER	
10	241200292	GRIGLIA FORNO S/900 GRILLE POUR FOUR GN2/1 WIRE OVEN SHELF GN 2/1 BACKOFENROST GN2/1	
11	A00531	ASS.GUIDA FORNO CON PERNI(SMALTATA) ASS. GLISSIERE FOUR AVEC PIVOT ENAMELLED OVEN TRAY SLIDE ASS. WITH PIVOT EMAILIERTEN SCHIENENPAAR SATZT MIT BOLZEN	
12	770324460	PROTEZIONE PER BULBO PROTECTION BULBE BULB PROTECTION KOLBEN SCHUTZ	
13	A00006 *Recommended spare parts*	ASS.CERNIERA PORTINA FORNO CHARNIERE DE PORTE(LA PAIRE) DOOR HINGE (1 PAIR) TUERSCHARNIERE,PAAR	
14	270201680	DADO PER BICONO 10/S-M20X1,5 ECROU POUR BICONE 10/S-M20X1,5 NUT FOR NOSE CONE 10/S-M20X1,5 MUTTER FUER BICONE 10/S-M20X1,5	
15	270201580	BICONO DM.10 S BICONE DIAM.10 S NOSE CONE DIAM.10 S BICONE DIAM.10 S	

16	270200700 *Recommended spare parts*	ELETTRODO PER ACCENSIONE ELECTRODE D'ALLUMAGE IGNITION PLUG ZUENDELEKTRODE	
17	A00539	ASS.FACCIATA FORNO GAS ASS. CADRE FRONTAL FOUR GAZ GAS OVEN FRAME ASS. OFEN VORDEREN RAHMENSATZ	
18	241200300	LEVERINO PER SUOLA LEVIER POUR SOLE FOUR LEVER FOR OVEN BASE PLATE HEBEL FÜR OFEN	
19	270112320	ASS. CAVO PER PIEZO L=900 CABLE DE PIEZO =900 MM CABLE FOR PIEZO L=900 MM ZUENDKABEL L=900 MM	
20	A00477 *Recommended spare parts*	ASS. PIEZO ASS. PIEZO ASS. PIEZO PIEZZO	
21	790120320	ASS. GUIDE ARMADIO 6-F + F. ASS.GLISSIERES ARMOIRE 6 FEUX+FOUR CUPBOARD RUNNERS ASS. SCHIENENPAAR SATZ FÜR SCHRANK	
22	A00544 *Recommended spare parts*	ASS. TERMOCOP. TARGET M9X1 L=750 ASS. TERMOCOUPL. TARGET M9X1 L=750 TARGET THERMOCOUPLE ASS. M9X1 L=750 THERMOEL. SATZ M9X1 L=750	
23	A00543	ASS.PORTINA SX ARMADIO FORNO STYLE ASS.PORTE GAUCHE ARMOIRE FOUR L.H. CUPBOARD DOOR ASS. LINKE TUR NEBEN OFEN NEW STYLE	
25	750100440	ASS.CERNIERA INF.DX. ASS.CHARNIERE INF. DROITE R.H. BOTTOM HINGE ASS. RECHTE UNTERE SCHARNIEREN SATZ	
27	770346600	SUPP. CALAMITA DM.22 A.1/2 C/FORNO SUPP. AIMANT DM.22 AR.400MM AV/FOUR MAGNET SUPPORT DM. 22 MAGNET HÄLTERUNG DM 22	
28	LOGO	LOGO PER MANOPOLA LOGO POUR BOUTON LOGO FOR KNOBS LOGO FÜR KNEBEL	
29	770124970 *Recommended spare parts*	ASS. MAN.RUB.GAS TERMOST. STYLE ASS.BOUTON ROB.GAZ TERMOST. THERMOST. KNOB ASS FOR GAS COCK THERMOST. KNEBELSATZ FÜR GAS HAHN	
30	290202430 *Recommended spare parts*	MOLLA PER MANOPOLA RESSORT DE BOUTON KNOB SPRING KNEBELFEDER	
31	290204920 *Recommended spare parts*	BORCHIA PER MANOPOLA BLU ANNEAU POUR BOUTON BLEU BLUE RING FOR GAS KNOB BLAUEN RING FUER KNEBEL	
32	4198808	CALAMITA 22X3 GAMBO M6X10 AIMANT 22X3 - M6X10 MAGNET 22X3 - M6X10 MAGNET 22X3 - M6X10	

33	741201310	BOCCOLA PER CERNIERA PORTINA BOUCLE POUR CHARN. PORTE BUSHING FOR DOOR HINGE BÜCHSE FÜR TÜR SCHARNIER	
34	270200221	GRIGLIA ARMADIETTO S.700 GRILLE POUR ARMOIRE S-700 WIRE CUPB. SHELF S-700 SCHRANKEINLEGEROST FÜR S/700	
40	A00541	ASS.COND. RAMPA INNESTO FORNO STY90 ASS.TUYAU EMBRAYAGE FOUR GAS INCREASE CONTROL OVEN PIPE ASS. GAS LEITUNG SATZ FÜR OFEN KUPPLUNG	
41	A00540	ASS.CONDUTTURA GAS FORNO STYLE ASS. TUYAU GAZ FOUR GAS OVEN PIPE ASS. GAS LEITUNG SATZ FÜR OFEN	
42	A00542	ASS.CONDUTTURA PILOTA FORNO STYLE ASS.TUYAU VEILLEUSE FOUR OVEN PILOT PIPE ASS. OFEN PILOT LEITUNG SATZ	
43	241204740	BICONO 4/S PER TUBO DM.4 BICONE 4/S POUR TUYAU DIAM.4 NOSE CONE 4/S FOR PIPE DIAM.4 MUTTER 4/S FUR ROHR D.4	
44	4392040	RACCORDO PER BICONO D4 M10X1 RACCORD POUR BICONE D4 M10X1 JOINT FOR NOSE CONE D4 M10X1 VERBIENDUNG FUER BICONE D4 M10X1	
45	270201600	BICONO DM.10 RACCORD BICONE DIAM.10 NOSE CONE DIAM.10 BICONE DIAM.10	
46	270201590	DADO PER BICONO DM.10 ECROU POUR BICONE DIAM.10 NUT FOR NOSE CONE DIAM. 10 MUTTER FUER BICONE DURCHM. 10	
47	770353420	INNESTO PICCOLO RUB. GAS FORNO EMBRAYAGE PETIT ROB.GAZ FOUR COUPLING FOR GAS OVEN COOK KUPPLUNG KLEIN FÜR GAS HAHN FÜR OFEN	
48	4155165	DADO ESAGONALE M16X1,5 ZINCATO ECROU ESAGONALE M16X1,5 ZINQUE ZINC-PLATED HEXAGON NUT M16X1,5 HEXAGONALE MUTTER M16X1,5	
49	770353440	RONDELLA INNESTO RUB. FORNO RONDELLE EMBRAYAGE ROB.FOUR COUPLING RING FOR OVEN COCK KUPPLUNG RING FÜR OFEN HAHN	
50	435223 *Recommended spare parts*	*FP*RUB.TER.25ST FRON.140-300°CSOST ROB.TERM. 25ST FRONT 140-30°C THERMOST. COCK 25ST. 140-300°C THERMOST. HAHN 25ST. 140-300°C	
51	BY PASS	VEDI TABELLA BY PASS MANUALE ISTRUZ VOIR FICHIER DES BY PASS SEE BY PASS TABLE SIEHE BY PASS TABELLE	
52	A00537	ASS.SUOLA FORNO GAS 1/1 C/CHIUSINO ASS. SOLE FOUR GAZ 1/1 GAS OVEN BASE PLATE ASS. 1/1 BACKOFEN BODEN SATZ. 1/1	

53	770347580	ANGOLARE SX FERMO PORTA FORNO PLATINE GAUCHE FERME PORTE FOUR LH ANGEL FOR OVEN DOOR LINKEN ECKELEMENT FÜR OFEN TÜR	
54	770347570	ANGOLARE DX FERMO PORTA FORNO PLATINE DROITE FERME PORTE FOUR RH ANGEL FOR OVEN DOOR RECHTEN ECKELEMENT FÜR OFEN TÜR	
55	A00534	ASS.PORTA FORNO STYLE CON MANIGLIA ASS. PORTE FOUR AVEC POIGNE OVEN DOOR NEW STYLE ASS.W/HANDLE OVEN TÜR MIT GRIFF	