016.40.149 0211 080201 DONADINI & C

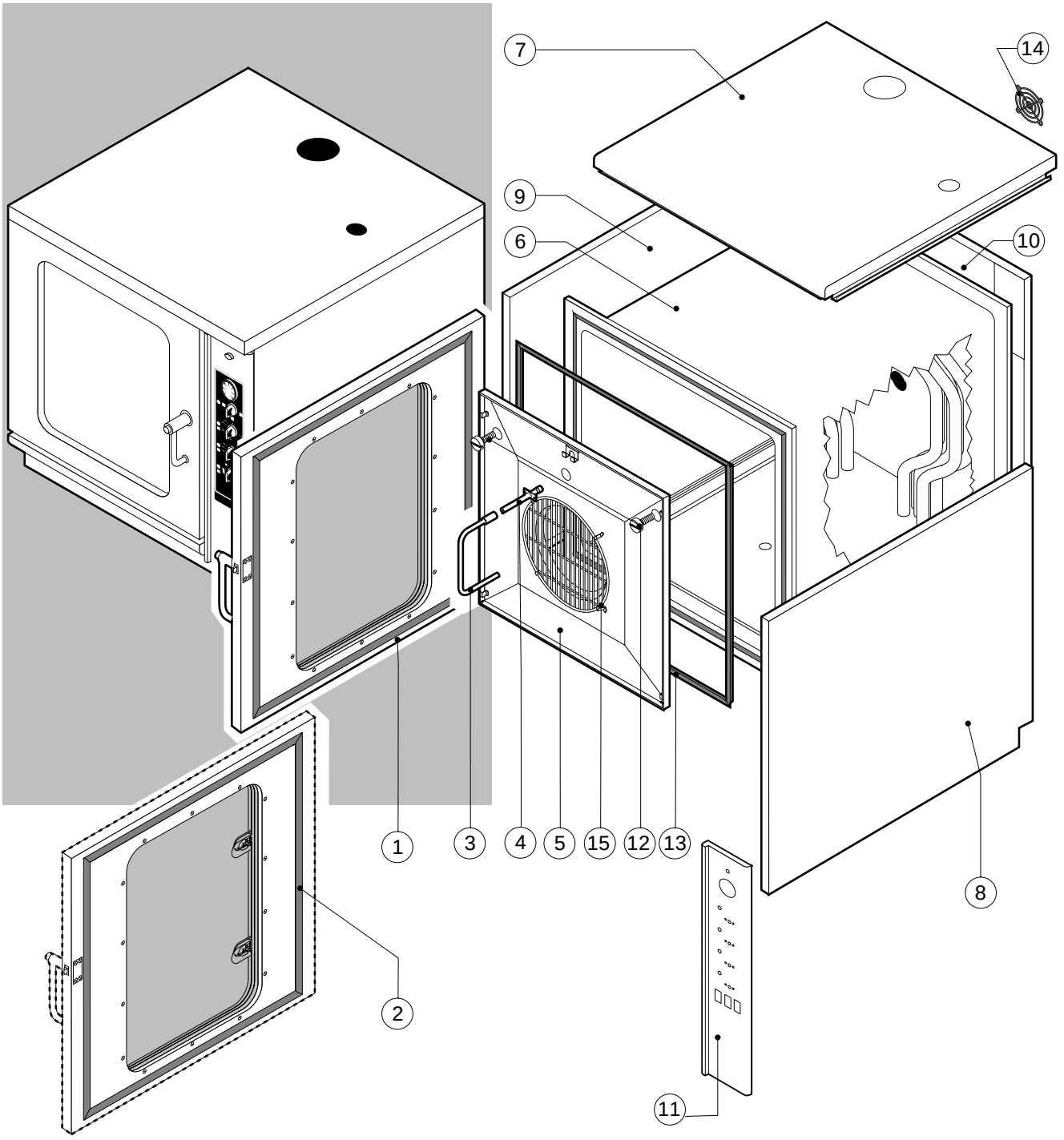

POS.	CODE	PIECES	DESCRIPTION
1	R10105940	1	DOOR ASSEMBLY
2	R10105950	1	DOOR ASSEMBLY WITH LIGHTS
3	R10206480	1	SPRITZER EXTENSION
4	R10206540	1	SPRITZER UNION
5	R10207271	1	FAN GUARD PANEL ASSEMBLY
6	R10207501	1	COOKING CABINET ASSEMBLY
7	R10212090	1	COVER PANEL
8	R10212380	1	RIGHT SIDE PANEL
9	R10212390	1	LEFT SIDE PANEL
10	R10212400	1	REAR PANEL
11	R10212490	1	CONTROL PANEL
12	R58003100	2	FAN GUARD FASTENING SCREW
13	R70043270	1	FRONT GASKET
14	R75300020	1	FAN GUARD GRID Ø 120
15	R75300090	1	FAN GUARD GRID Ø 350

POS.	CODE	PIECES	DESCRIPTION

EDIZIONE 0999

CG 210 M tav. A

016.40.149 0212 080201 DONADINI & C

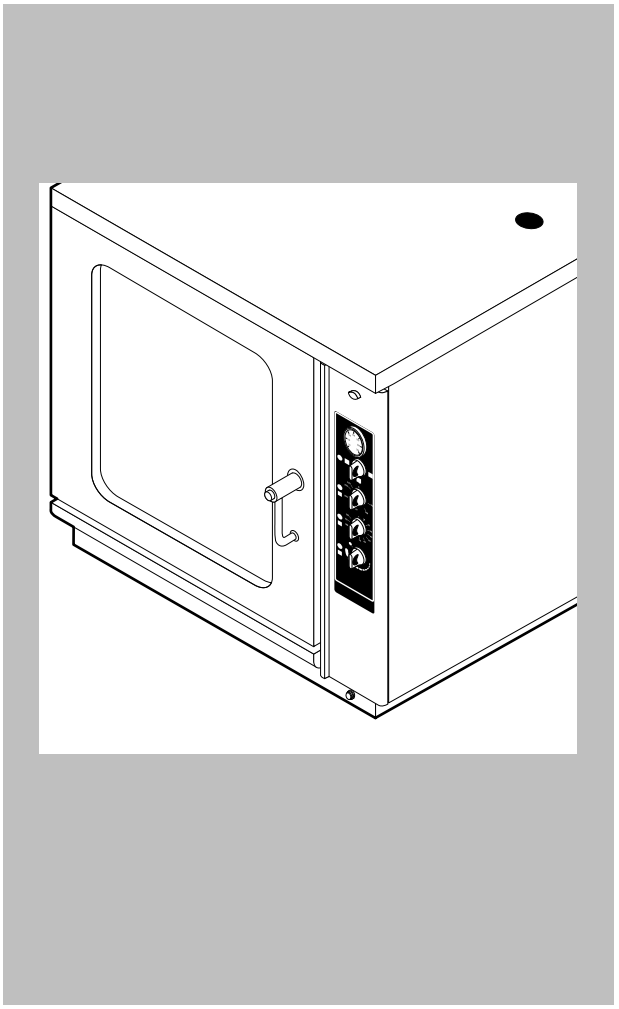

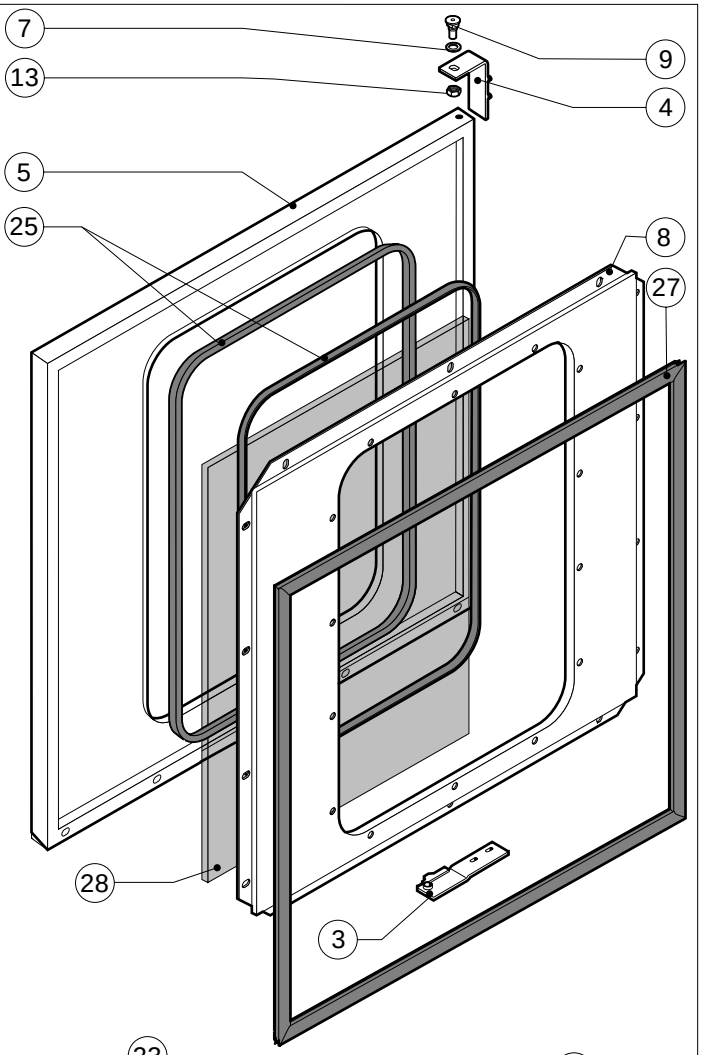

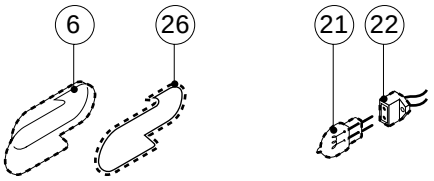

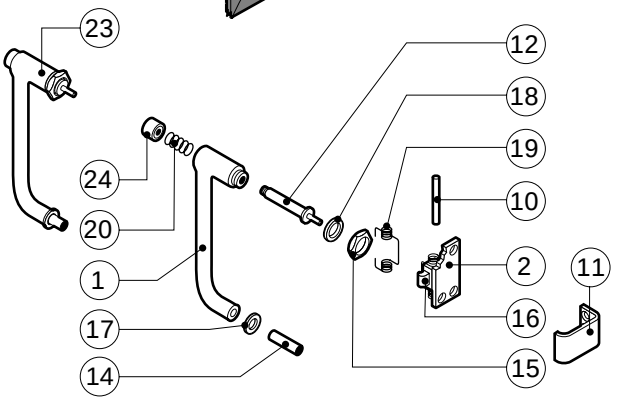

POS.	CODE	PIECES	DESCRIPTION
1	R09200230	1	DOOR HANDLE
2	R10100110	1	PRONG FLANGE
3	R10201190	1	LOWER DOOR HINGE
4	R10201290	1	UPPER DOOR HINGE
5	R10212240	1	DOOR
6	R10400150	2	LIGHT PROTECTION
7	R10401710	1	WASHER FOR UPPER DOOR HINGE
8	R10408130	1	INNER DOOR PANEL
9	R58002150	1	HINGE PIN
10	R58002160	1	DOOR HANDLE PRONG PIN
11	R58002760	1	DOOR HANDLE PRONG COUPLER
12	R58003240	1	DOOR HANDLE BUTTON ROD
13	R58004050	1	NUT FOR UPPER DOOR HINGE
14	R58004270	1	DOOR HANDLE SPACER
15	R58004830	1	RING NUT M18x1
16	R58005050	1	DOOR HANDLE PRONG
17	R58005340	1	DOOR HANDLE LOWER INSULATION WASHER
18	R58005350	1	DOOR HANDLE UPPER INSULATION WASHER
19	R61620012	1	DOOR HANDLE CATCH SPRING

POS.	CODE	PIECES	DESCRIPTION
20	R61620041	1	DOOR HANDLE BUTTON SPRING
21	R65270020	2	LIGHT 20W 12V G4
22	R65270400	2	LIGHT SOCKET
23	R69015000	1	DOOR HANDLE ASSEMBLY
24	R69031190	1	DOOR HANDLE PUSH BUTTON
25	R70040200	2	GLASS GASKET
26	R70040800	2	LIGHT PROTECTION GASKET
27	R70042030	1	DOOR GASKET
28	R71030120	1	DOOR GLASS

016.40.149 0213 080201 DONADINI & C

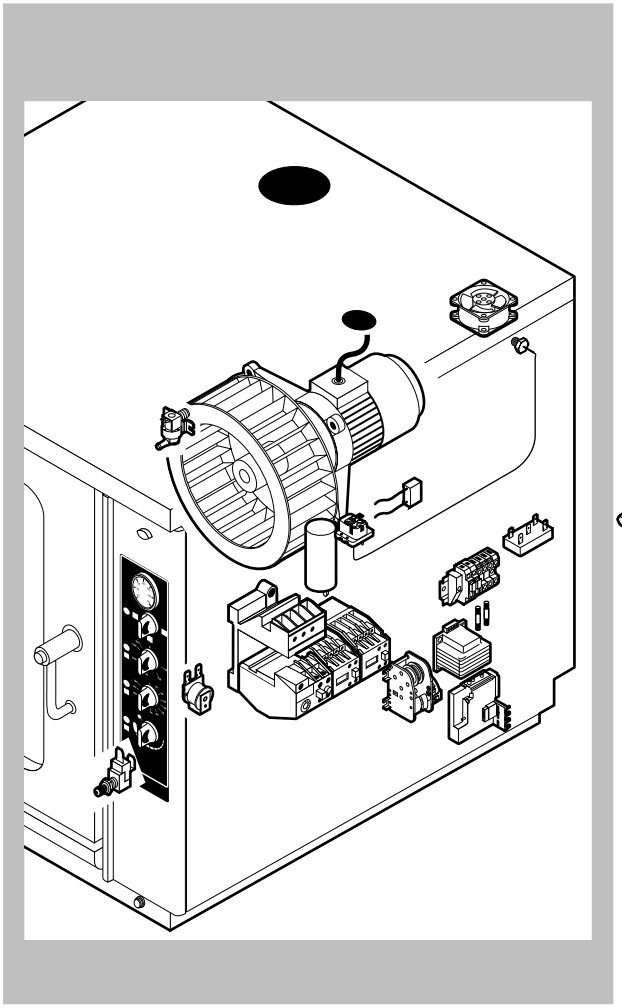

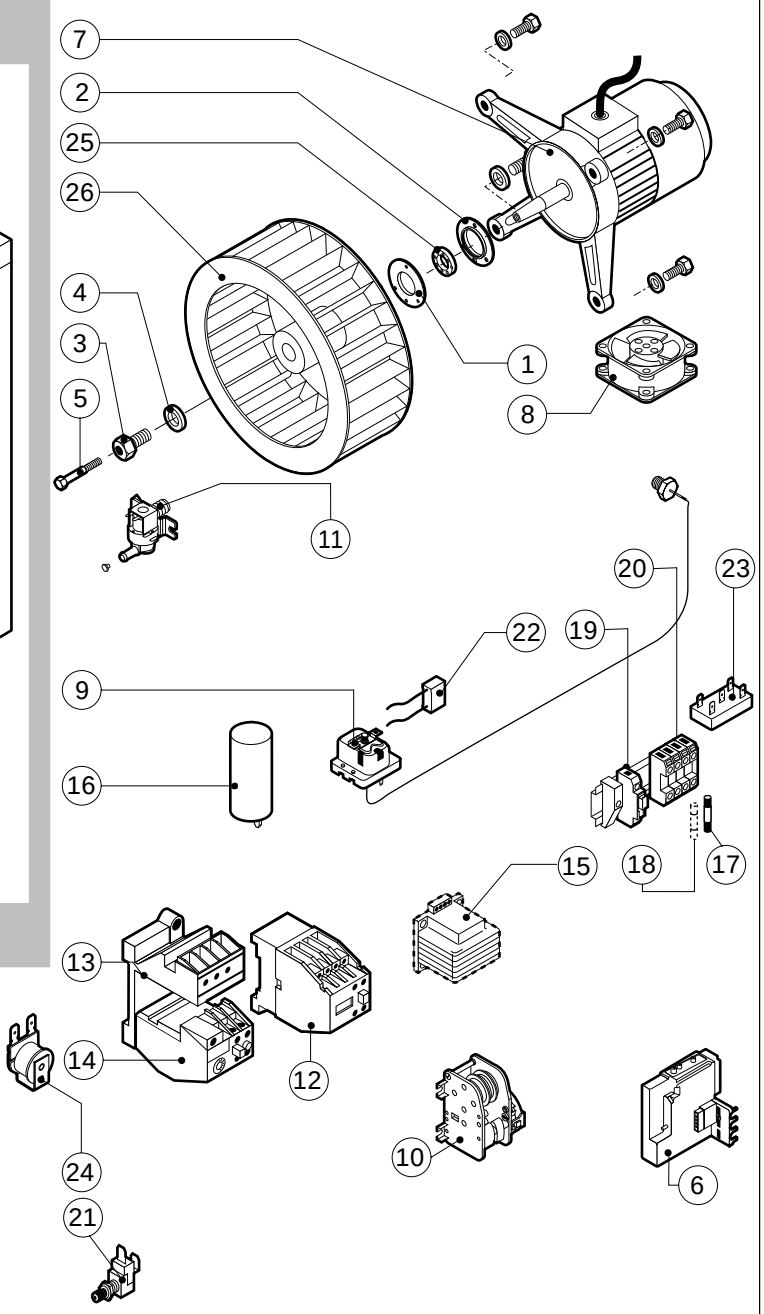

POS.	CODE	PIECES	DESCRIPTION
1	R58003840	1	MOTOR GASKET BRASS FLANGE
2	R58003850	1	MOTOR GASKET BRASS COUNTER FLANGE
3	R58004000	1	FAN SCREW M12x1.5 SX
4	R58004010	1	FAN WASHER Ø 30/12.5
5	R61020562	1	FAN SCREW TE A2 M6x55
6	R63060100	1	BURNER IGNITION PANEL
7	R65040041	1	MOTOR HP 1 KIT
8	R65060050	1	COMPONENTS VENTILATION MOTOR Ø 120
9	R65070070	1	CHAMBER SAFETY THERMOSTAT
10	R65090190	1	REVERSING SWITCH 8'
11	R65115040	1	SOLENOID VALVE 220V 50HZ WITH FLOW REDUCER
12	R65140150	2	CONTACTOR 3TF4011-OAUO 240V
13	R65160050	1	THERMIC SWITCH SUPPORT 3UX1418
14	R65160130	1	THERMIC PROTECTION 3UA5000-1F 3.2-5A
15	R65180430	1	TRANSFORMER 40VA
16	R65190030	1	CAPACITOR 16 µF
17	R65200200	1	FUSE 2A
18	R65200350	1	FUSE 0.4A (T)
19	R65210020	2	FUSE CARRIER

POS.	CODE	PIECES	DESCRIPTION
20	R65220220	1	TERMINAL BOARD
21	R65260540	1	DOOR SWITCH
22	R65280130	1	INTERFERENCE SUPPRESSOR
23	R65280210	1	INTERFERENCE SUPPRESSOR
24	R65330010	1	BUZZER
25	R70020050	1	MOTOR GASKET
26	R75400380	1	FAN Ø 350x120/24 50HZ P.D. KIT

016.40.149 0214 080201 DONADINI & C

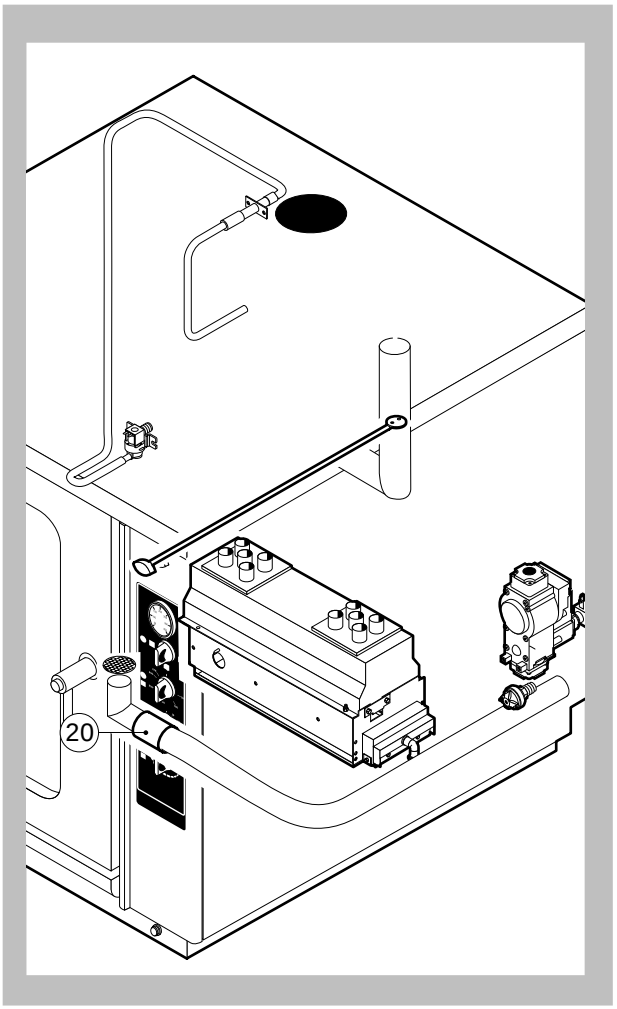

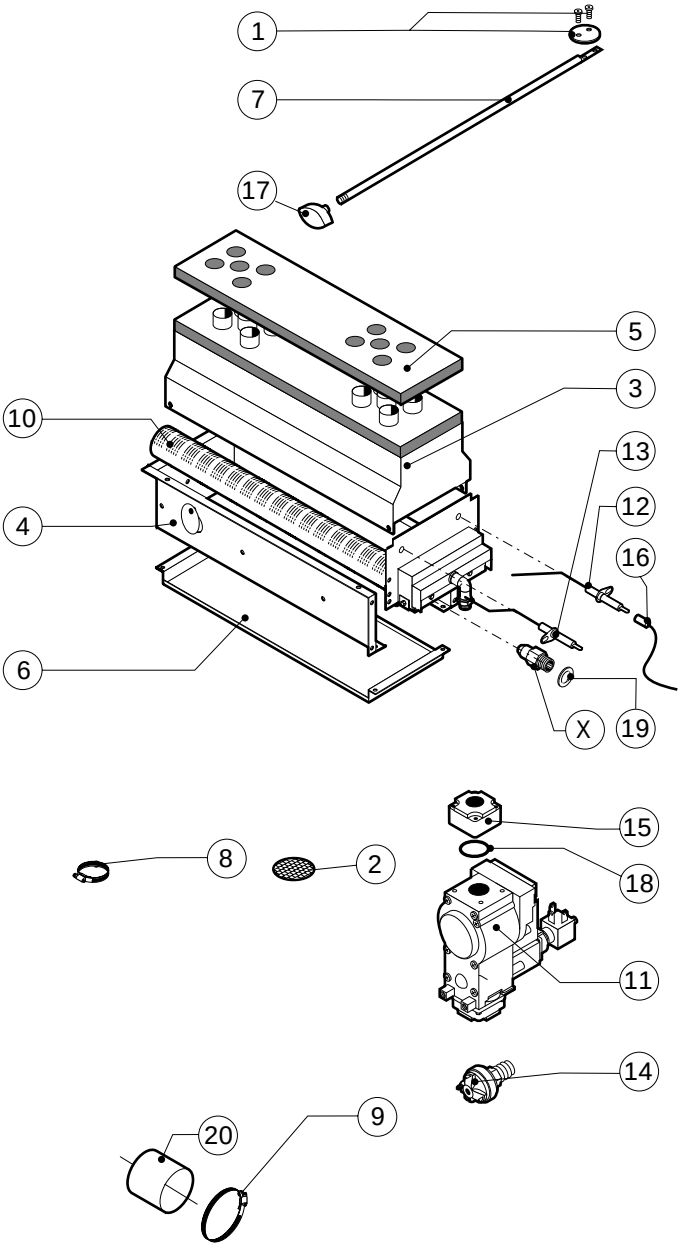

POS.	CODE	PIECES	DESCRIPTION
1	R04403460	1	CHAMBER VENT PLATE Ø 46
2	R10201710	1	DRAIN FILTER
3	R10202420	1	COMBUSTION CABINET
4	R10202520	1	CABINET BURNERS SUPPORT
5	R10408650	1	COMBUSTION CABINET INSULATION PLATE
6	R10409390	1	CHAMBER BURNERS PROTECTION PLATE
7	R58003480	1	CHAMBER VENT ROD
8	R61630011	2	METAL CLAMPS 12-22/9
9	R61630031	2	METAL CLAMPS 40-60/9
10	R63016260	1	CHAMBER BURNER ASSEMBLY
11	R63020150	1	GAS SOLENOID VALVE
12	R63050340	1	IGNITOR
13	R63050350	1	SENSOR
14	R63070010	1	GAS SAFETY PRESSURE SWITCH PG 901.61
15	R63080040	2	STRAIGHT FLANGE 1/2"
16	R66605860	2	FLAME IGNITION CABLE/FLAME SENSOR CABLE
17	R69010410	1	STEAM OUTLET KNOB
18	R70010070	2	RING
19	R70030090	2	NOZZLE GASKET

POS.	CODE	PIECES	DESCRIPTION
20	R70060040	1	SILICON COUPLING Ø 50
X		2	NOZZLE (See service manual)

016.40.149 0215 080201 DONADINI & C

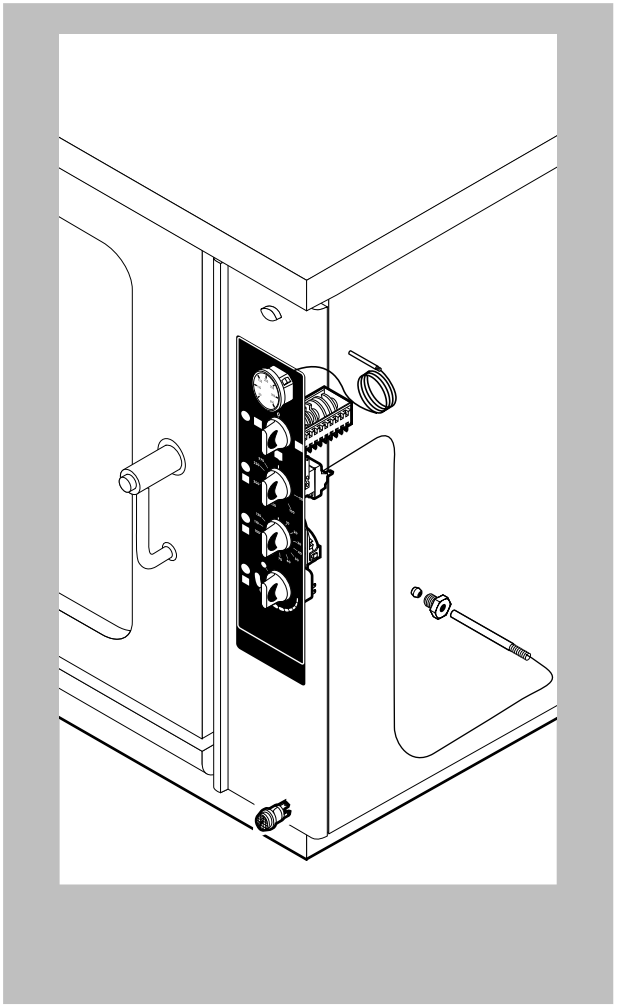

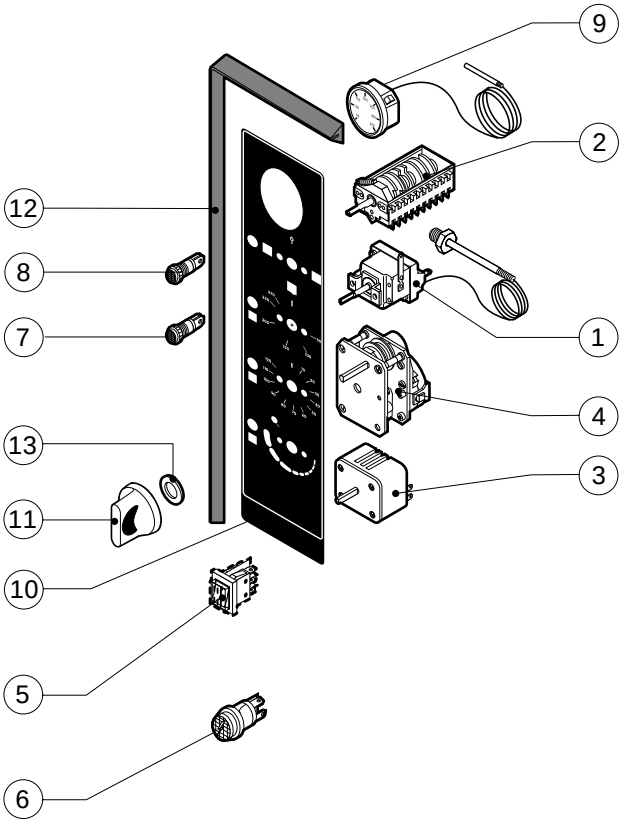

POS.	CODE	PIECES	DESCRIPTION
1	R65070210	1	CABINET THERMOSTAT 50/270°C
2	R65080010	1	MAIN SELECTOR SWITCH
3	R65080250	1	ENERGY REGULATOR
4	R65090020	1	TIMER
5	R65260050	1	SWITCH
6	R65260480	1	UNIPOLAR PUSH BUTTON
7	R65270220	3	ORANGE INDICATING LIGHT
8	R65270230	1	GREEN INDICATING LIGHT
9	R65340050	1	THERMOMETER
10	R67012200	1	LAINOX PLATE
11	R69030150	4	KNOB KIT
12	R70040840	1	CONTROL PANEL GASKET
13	R70050020	8	KNOB GASKET

POS.	CODE	PIECES	DESCRIPTION