lamber

Glasswashers
Lave-verres

S280

SPARE PARTS
PIECES DETACHEES

Ed.
09/2001

C UL US
LISTED
COMMERCIAL DISHWASHERS
13CA

CLASSIFIED UL EPH
ANSI/NSF3

lamber	WASH COMPONENTS COMPOSANTS LAVAGE	MOD. **S280**	TAV. **1 C** ED. 09/2001

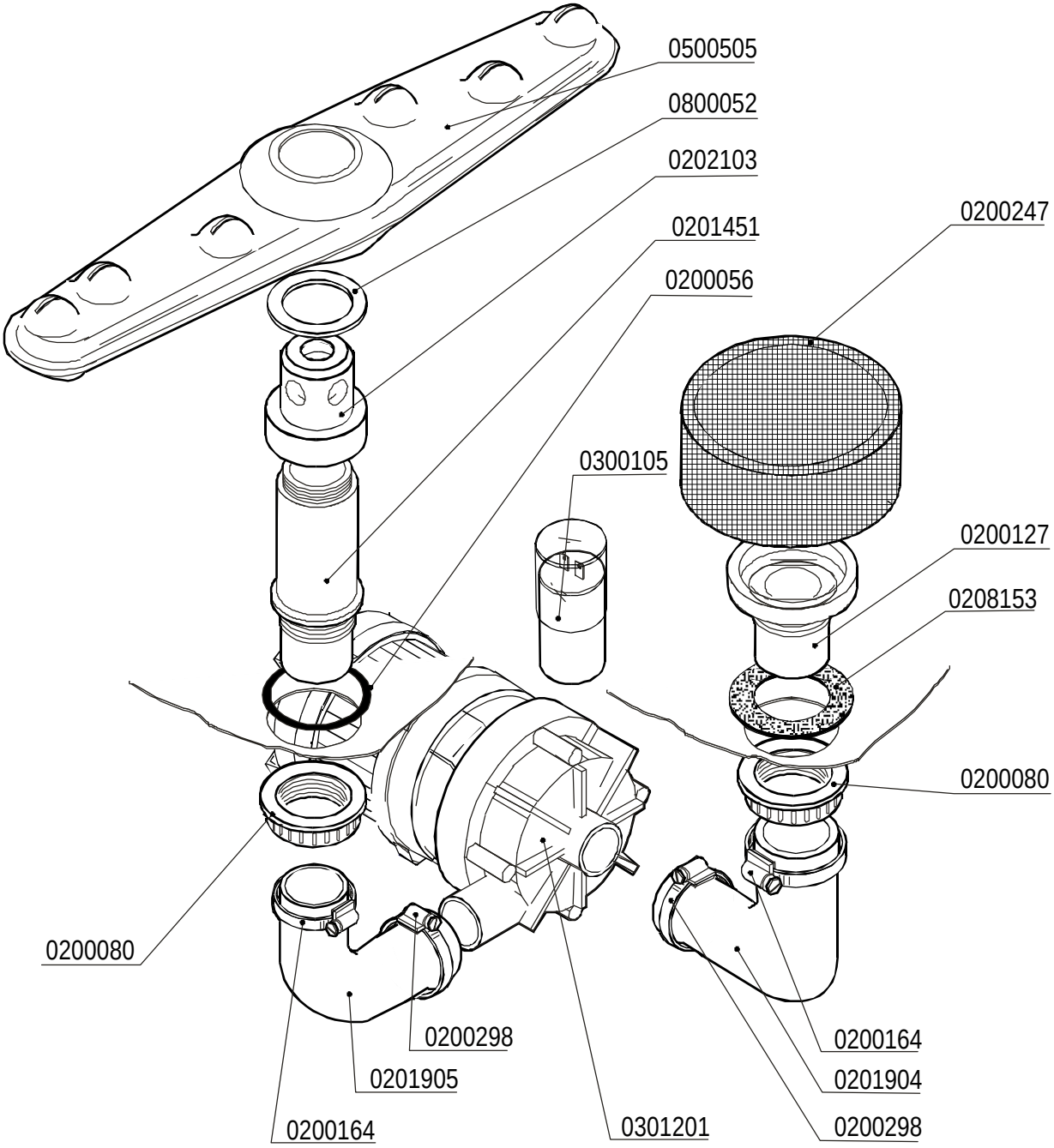

lamber	RINSE COMPONENTS COMPOSANTS RINCAGE	MOD. **S280**	TAV. **2 C** ED. 09/2001

TAV. 2 DI 7

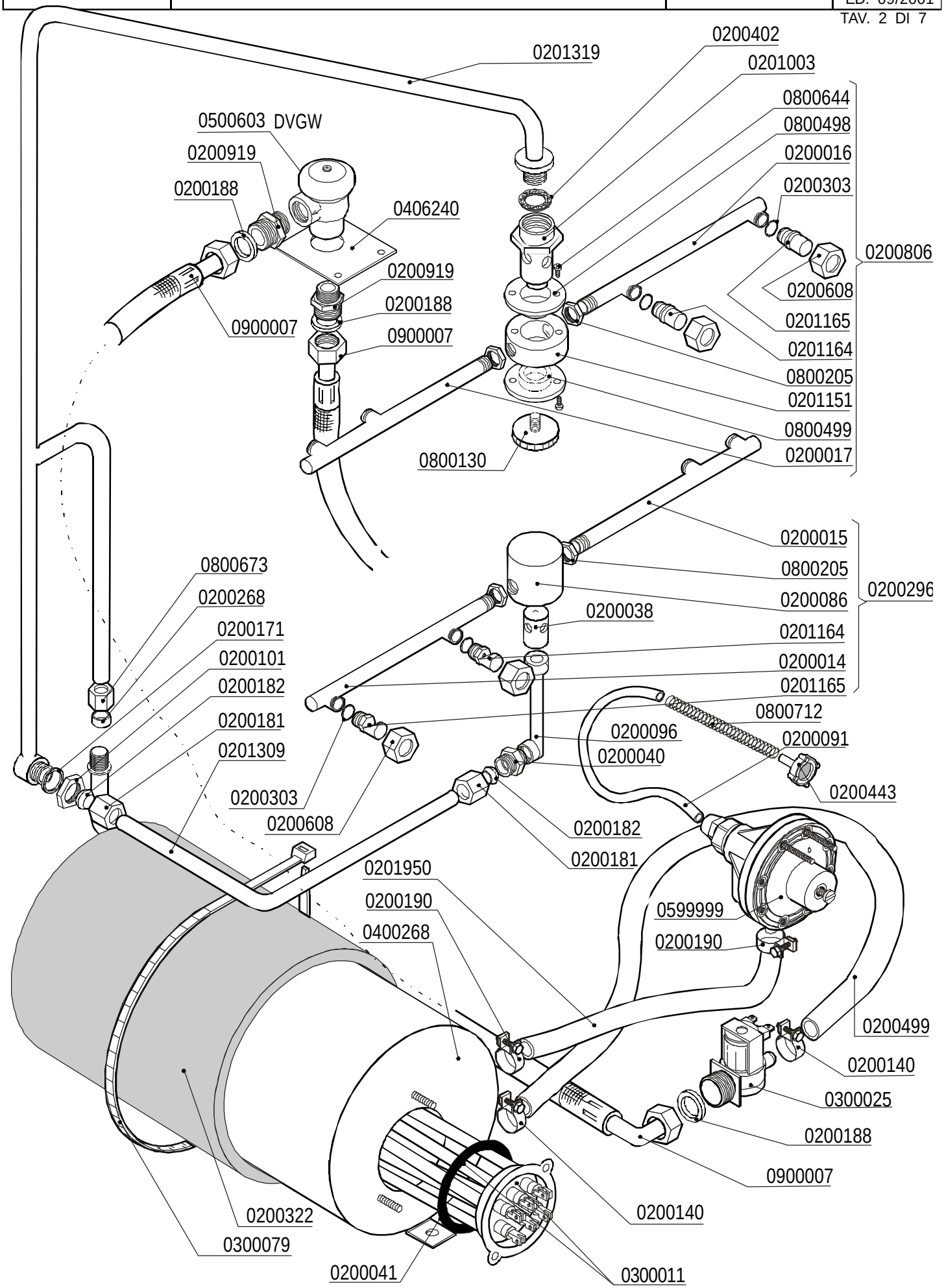

lamber	TANK COMPONENTS COMPOSANTS CUVE	MOD. **S280**	TAV. **3 C** ED. 09/2001

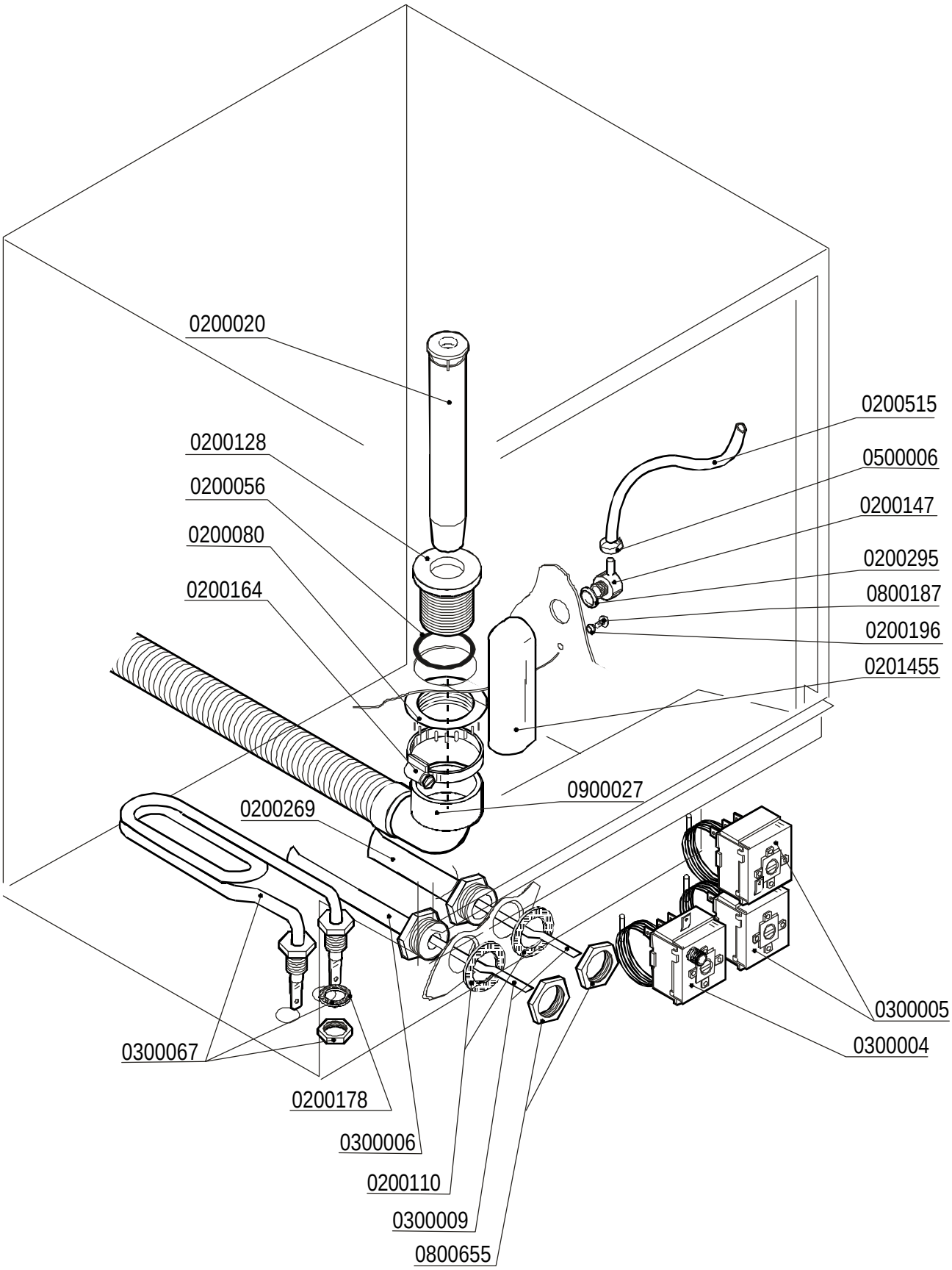

lamber	CONTROL BOX TABLEAU ELECTRIQUE	MOD. **S280**	TAV. **4 C** ED. 09/2001

TAV. 4 DI 7

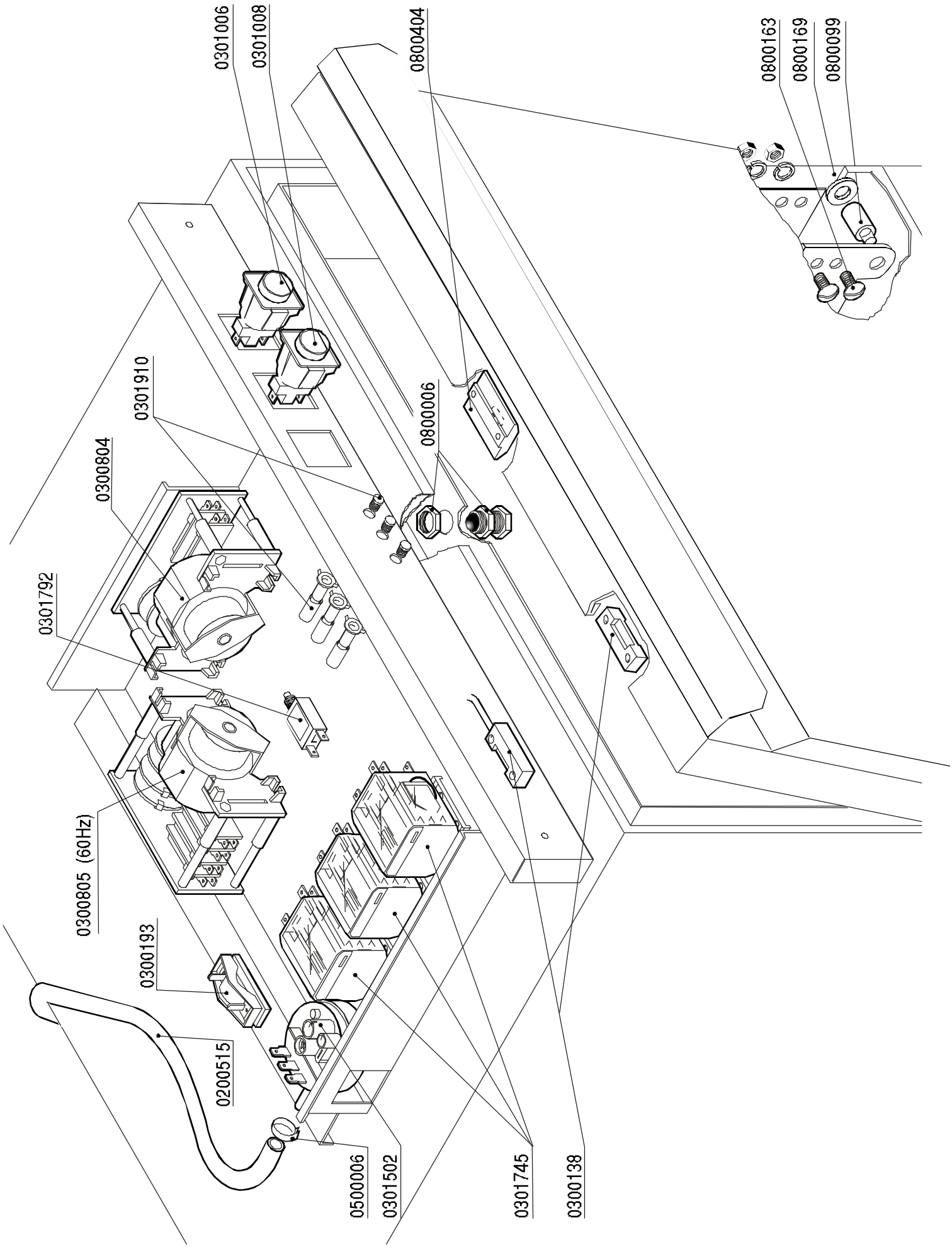

lamber	DRAIN PUMP PARTS POMPE DE VIDANGE	MOD. **S280**	TAV. **5 C** ED. 09/2001

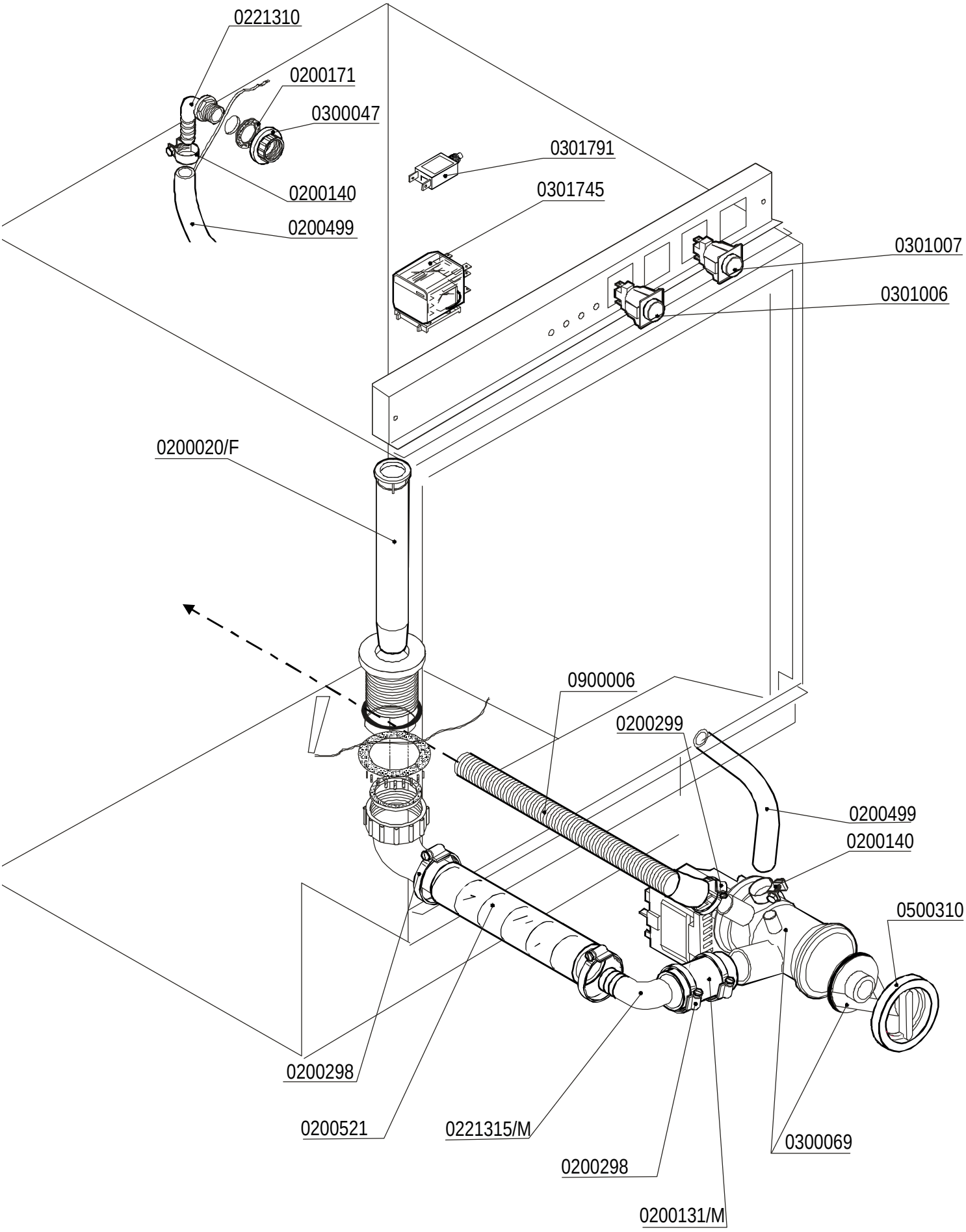

lamber	HOOD CARROSSERIE	MOD. **S280**	TAV. **6 C** ED. 09/2001

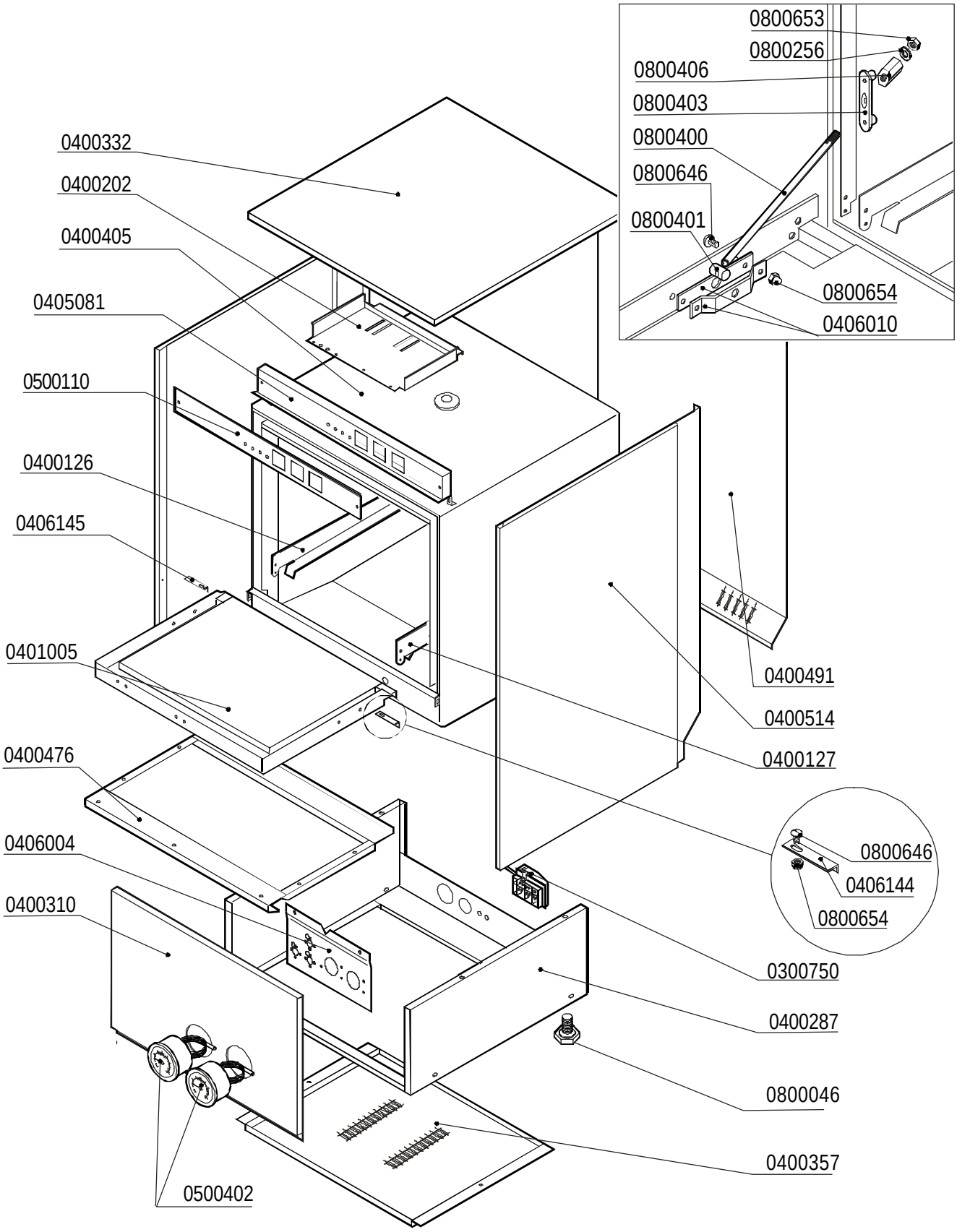

DOSATORE DETERSIVO - DOSEURDEPRODUITLESSIVIEL
DETERGENTPUMP - WASCHMITTELDOSIERGERÄT

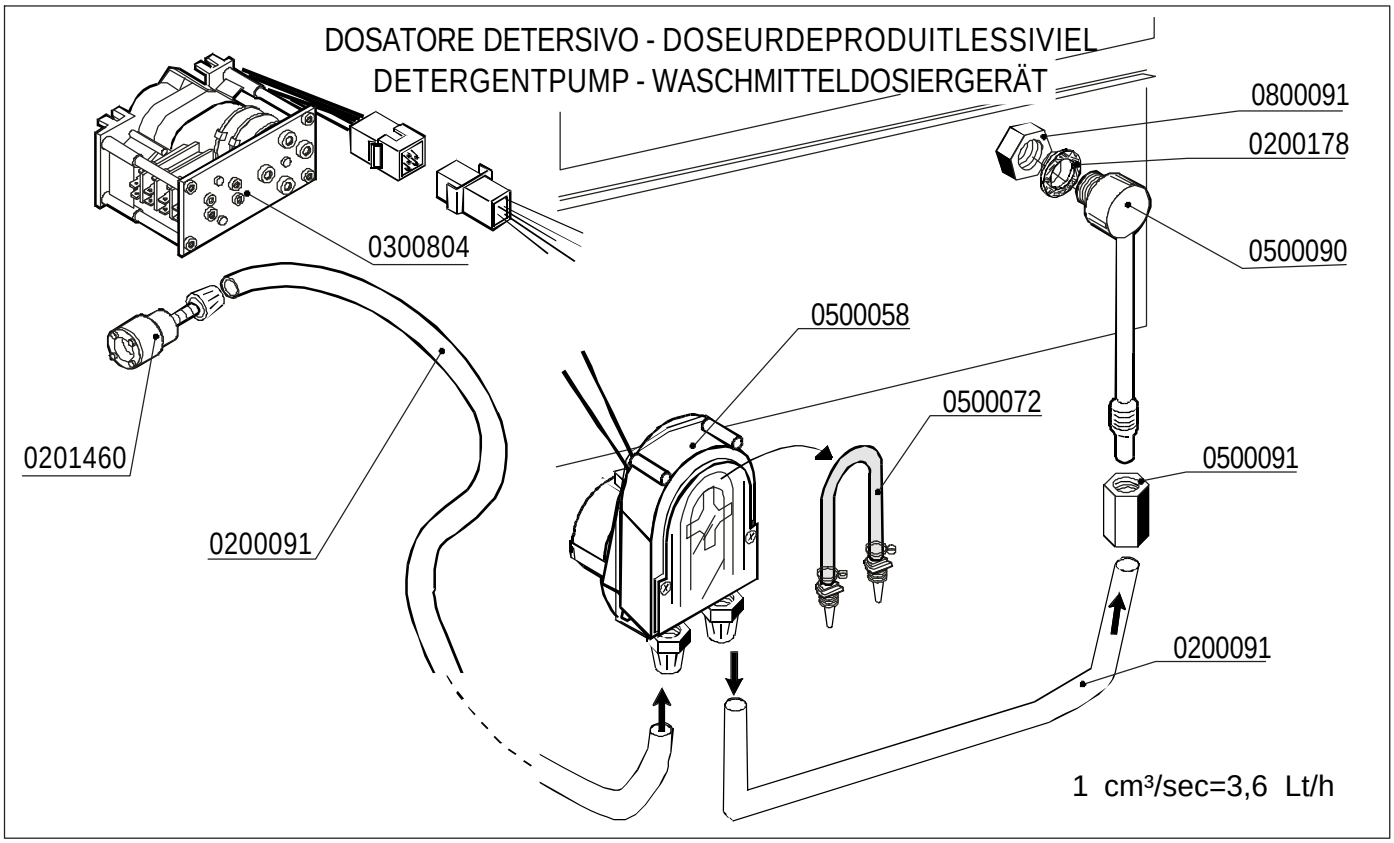

DOSEUR DE PRODUITPOUR RINÇAGE
RINSE AID DISPENSER
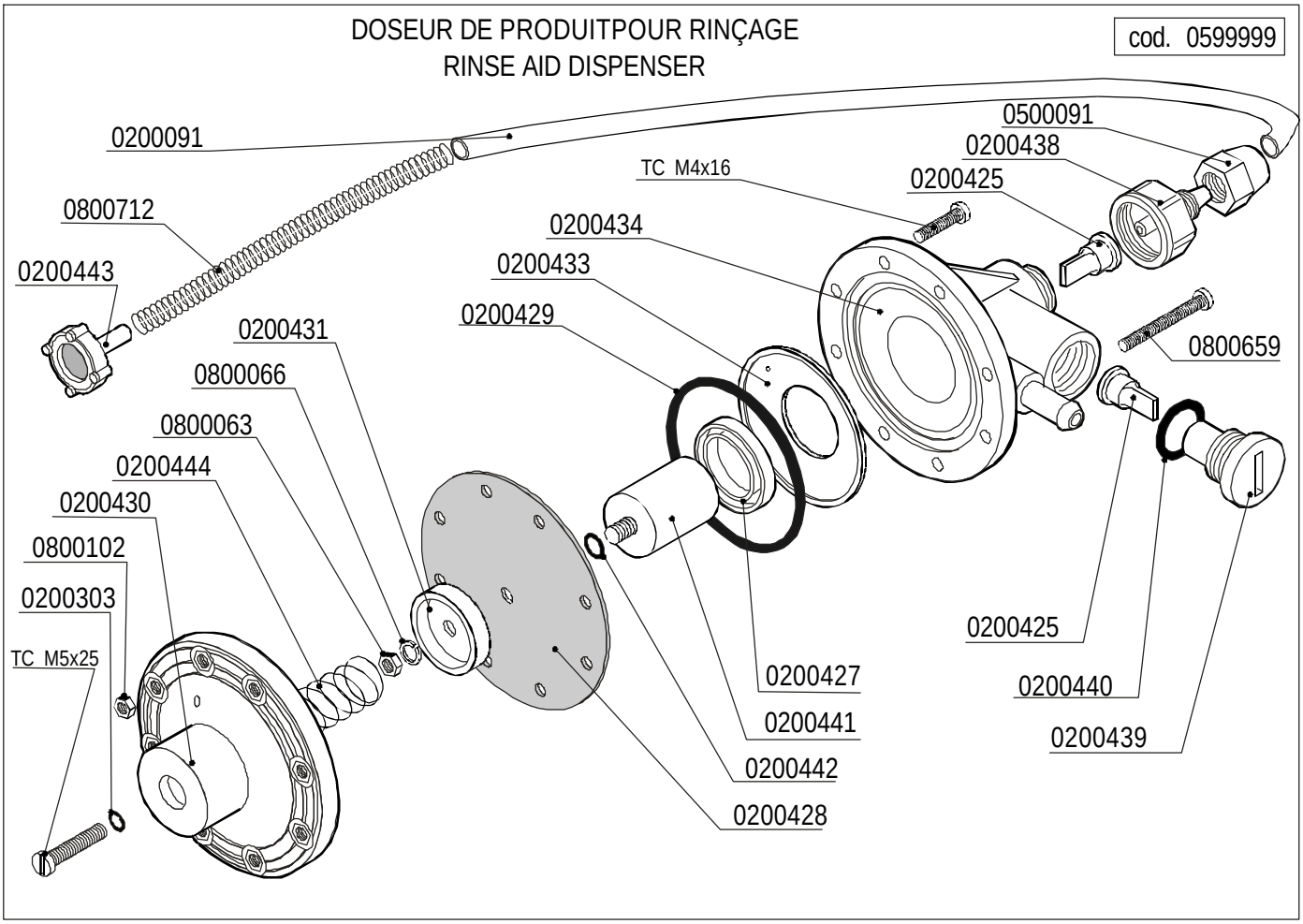
cod. 0599999