MODEL	EVOLUTION	TABLE	DATE
TG6 CORPETTO	1	D	22/11/2002

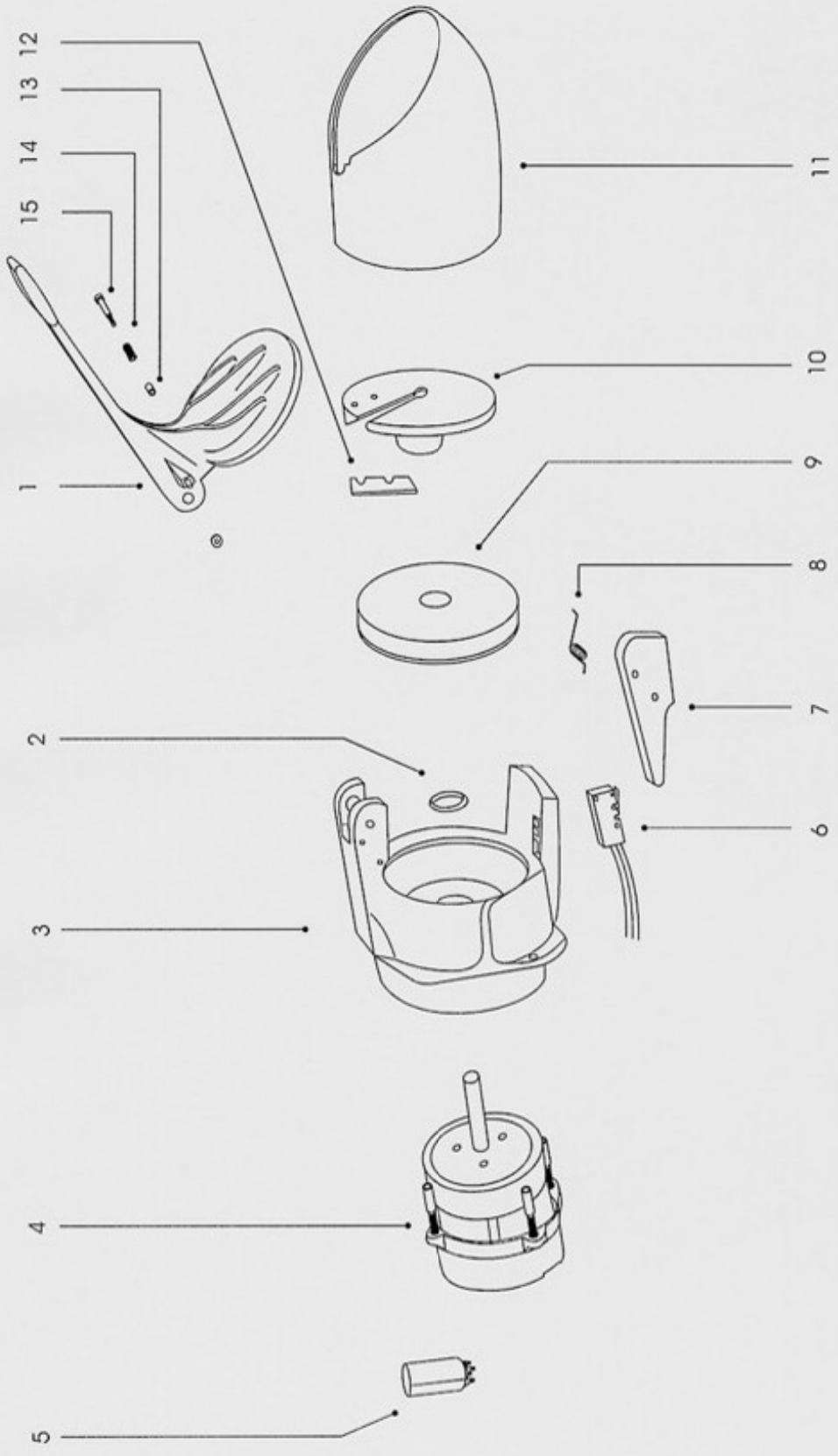

N.	Code	Caratteristics
1	C0003T404	
2	C0007T402	
3	C0001T406	
4	C00061228	230V-50Hz
	C000612281	220V-60Hz
	C000612282	110V-60Hz
5	C00061107	230V-50/60Hz
	C00061108	110V-60Hz
6	C00061024	
7	C0007T401	
8	C0008T401	
9	C0004T407	
10	C0003T403	
11	C0003T401	
12	C0004T406	
13	C00071615	
14	C0008XX01	
15	C0004T814	

	Descriptions

MACAP S.r.l. Via Toniolo 18 - 30030 - Maerne di Martellago - Venezia - Italy Tel.+39.041.5030466 Fax +39.041.5030477 info@macap.it