MACAP

MODEL	EVOLUTION	TABLE	DATE
P200 CORPETTO	2	E	22/11/2002

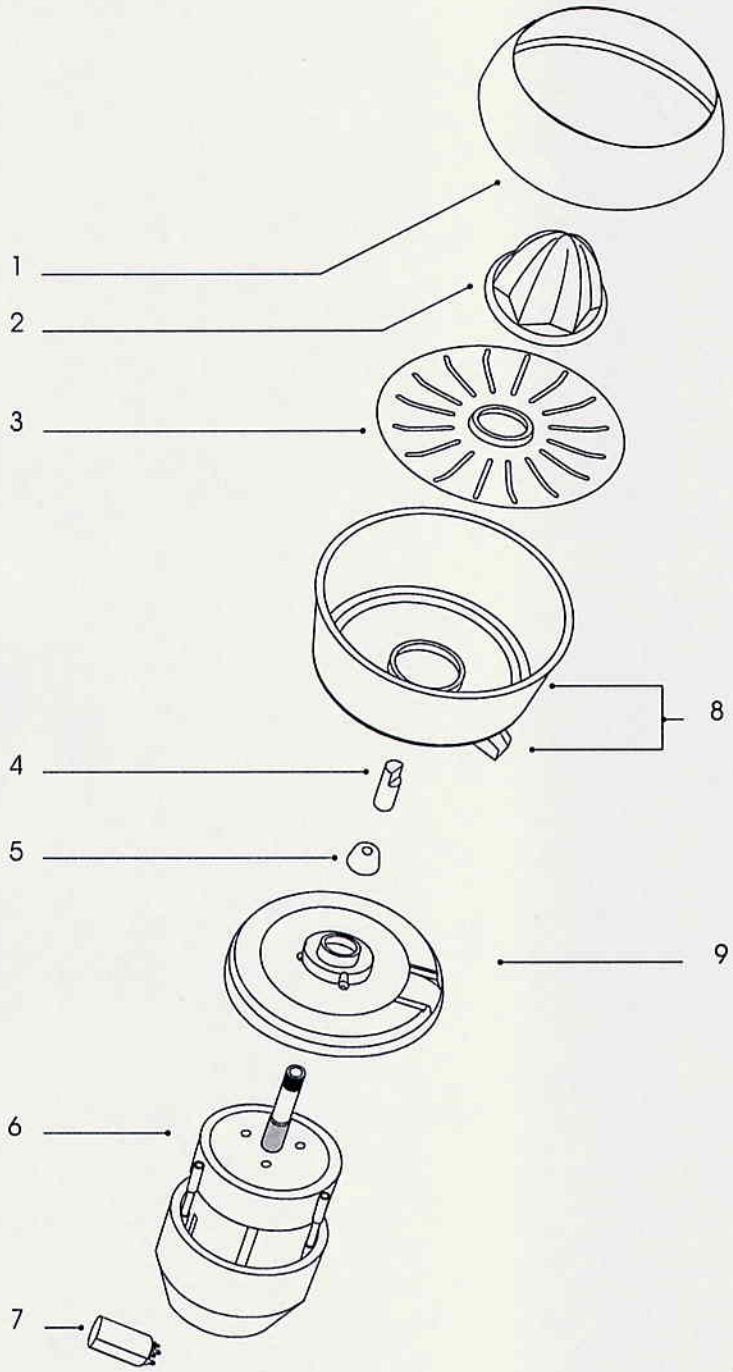

N.	Code	Caratteristics
1	C0007S807	
2	C0007S822	
3	C0007S809	
4	C0004S8051	
5	C0004S813	
6	C00061220	230V-50Hz
	C000612201	220V-60Hz
	C000612202	110V-60Hz
7	C00061126	230V-50/60Hz
	C00061109	110V-60Hz
8	C0004S818	
9	C0007S801	

	Descriptions