FRY-TOP A GAS
Serie 1100

TIPO: 110/90FTTG, 110/90FTTG1/2R, 110/90FTTGR, 110/90FTTGC, 110/90FTTGC1/2R, 110/90FTTGCR, 110/90TFTTG, 110/90TFTTG1/2R, 110/90TFTTGR, 110/90TFTTGC, 110/90TFTTGC1/2R, 110/90TFTTGCR, 110/90FTTGG, 110/90FTTGE

Parti di ricambio

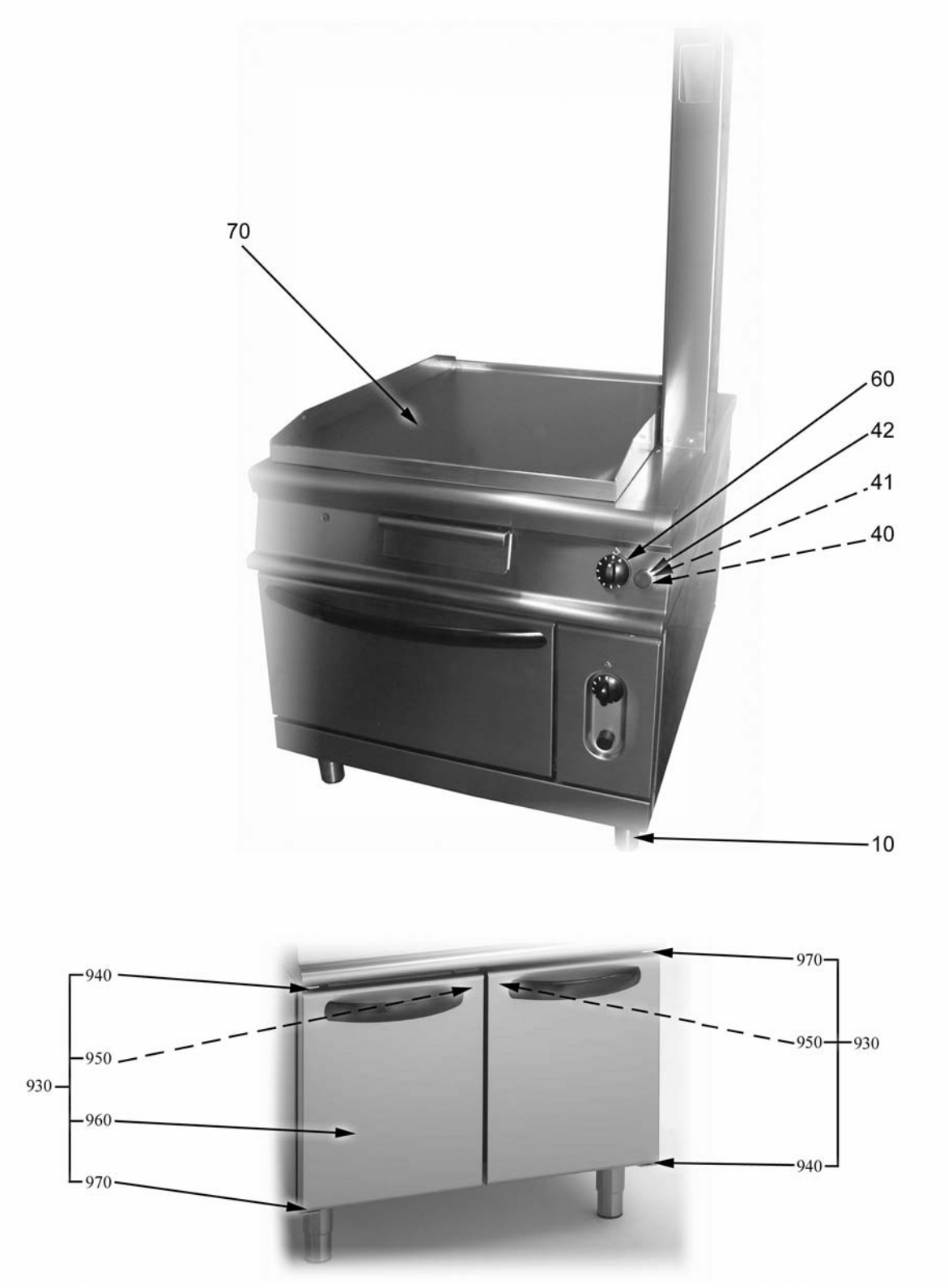
70
60
42
41
40
10
940
950
930
960
970
970
950
930
940

ID	Tipo	Descrizione	Codici
Module:Parti esterne e kit porte			
10	90,901/2R,90C,90R,90C1/2R,90CR,90GG,90GE	Piedino	826490142
40		Accensione piezoelettrica	6A041105
41		Rondella	822160540
42		Cappuccio	826630420
60		Manopola nera per frytop gas	2599302
70	90,90T,90GG,90GE	Piastra	2518100
70	901/2R,90T1/2R	Piastra	2518110
70	90R,90TR	Piastra	2518120
70	90TC,90C	Piastra	2518130
70	90TC1/2R,90C1/2R	Piastra	2518140
70	90TCR,90CR	Piastra	2518150
930	90C1/2R,90C,90,901/2R,90R,90CR	Kit porta	2593510
940	90C1/2R,90C,90,901/2R,90R,90CR	Cerniera inferiore destra superiore sinistra porta	2547870
950	90C1/2R,90C,90,901/2R,90R,90CR	Magnete	826900011
960	90C1/2R,90C,90,901/2R,90R,90CR	Porta	2593160
970	90C1/2R,90C,90,901/2R,90R,90CR	Cerniera inferiore sinistra superiore destra porta	2547860

90=110/90FTTG, 901/2R=110/90FTTG1/2R, 90R=110/90FTTGR, 90C=110/90FTTGC, 90C1/2R=110/90FTTGC1/2R, 90CR=110/90FTTGCR, 90T=110/90TFTTG, 90T1/2R=110/90TFTTG1/2R, 90TR=110/90TFTTGR, 90TC=110/90TFTTGC, 90TC1/2R=110/90TFTTGC1/2R, 90TCR=110/90TFTTGCR, 90GG=110/90FTTGG, 90GE=110/90FTTGE

A=3/N/PE~400/230V 50Hz, H=3/PE~230V 50Hz, P=1/N/PE~220-240V 50Hz

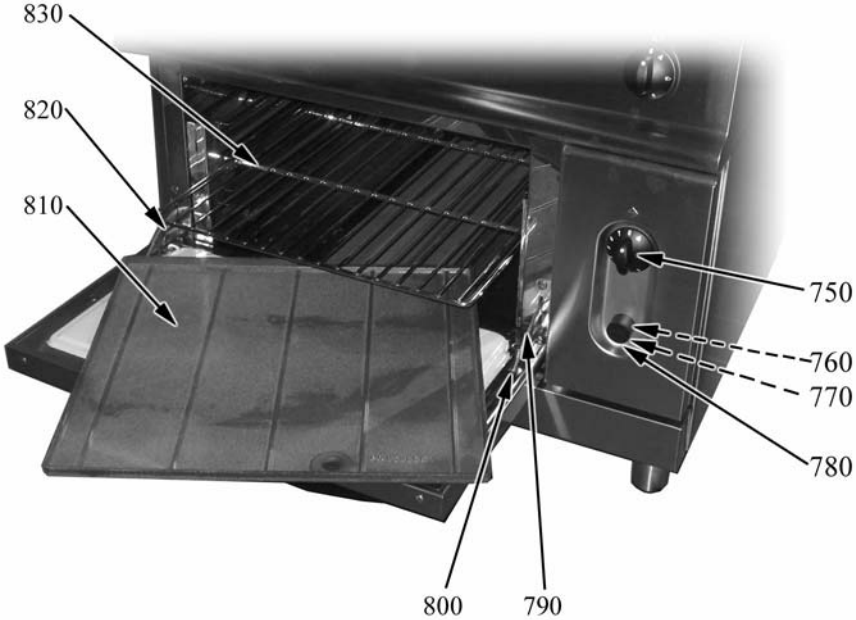
830
820
810
750
760
770
780
800
790

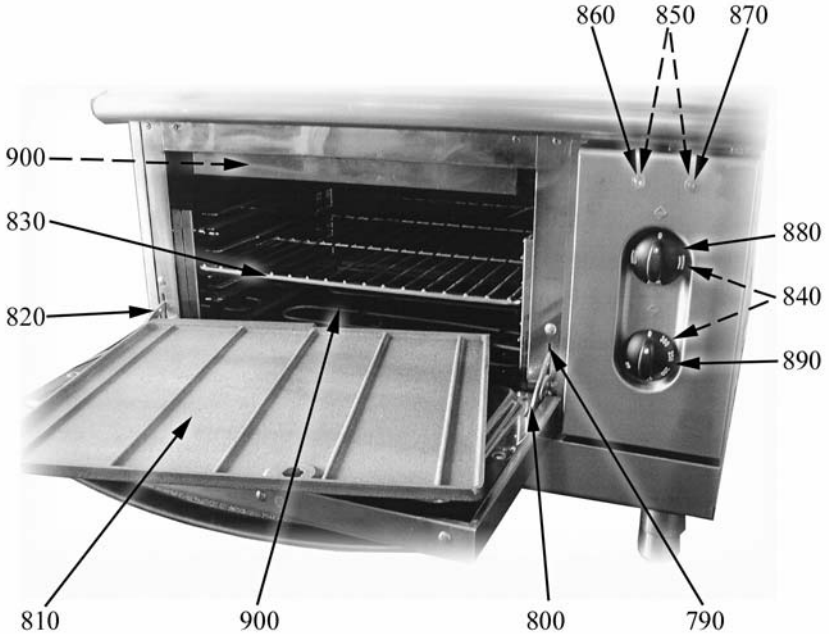
860
850
870
900
830
820
880
840
890
810
900
800
790

ID	Tipo	Descrizione	Codici
Module:Parti esterne forno gas e elettrico			
750	90GG	Manopola nera per forno gas	2599202
760	90GG	Accensione piezoelettrica	6A041105
770	90GG	Rondella	822160540
780	90GG	Cappuccio	826630420
790	90GG,90GE	Portarullini per cerniera	6A035930
800	90GG,90GE	Cerniera dx	6A035910
810	90GG,90GE	Suola forno	6A001010
820	90GG,90GE	Cerniera sx	6A035920
830	90GG,90GE	Griglia	826330120
840	90GE	Guarnizione manopola	2519490
850	90GE	Segnalatori luminosi	6A038506
860	90GE	Gemma bianca	6A039207
870	90GE	Gemma verde	6A038507
880	90GE	Manopola commutatore forno elettrico nera	2599207
890	90GE	Manopola forno elettrico nera	2599208
900	90GE	Resistenza 1500 W	826620041

90=110/90FTTG, 901/2R=110/90FTTG1/2R, 90R=110/90FTTGR, 90C=110/90FTTGC, 90C1/2R=110/90FTTGC1/2R, 90CR=110/90FTTGCR, 90T=110/90TFTTG, 90T1/2R=110/90TFTTG1/2R, 90TR=110/90TFTTGR, 90TC=110/90TFTTGC, 90TC1/2R=110/90TFTTGC1/2R, 90TCR=110/90TFTTGCR, 90GG=110/90FTTGG, 90GE=110/90FTTGE

A=3/N/PE~400/230V 50Hz, H=3/PE~230V 50Hz, P=1/N/PE~220-240V 50Hz

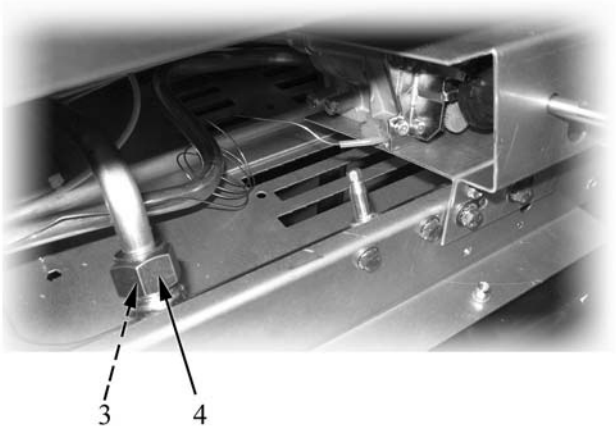
3
4

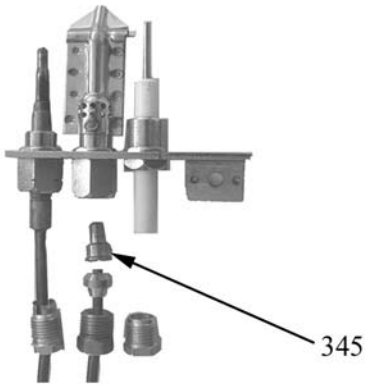
345

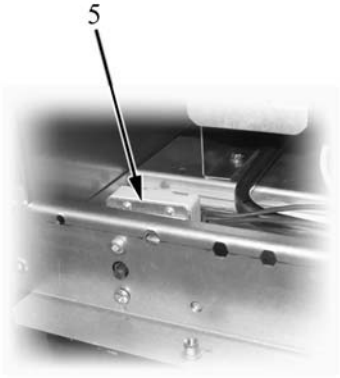
5

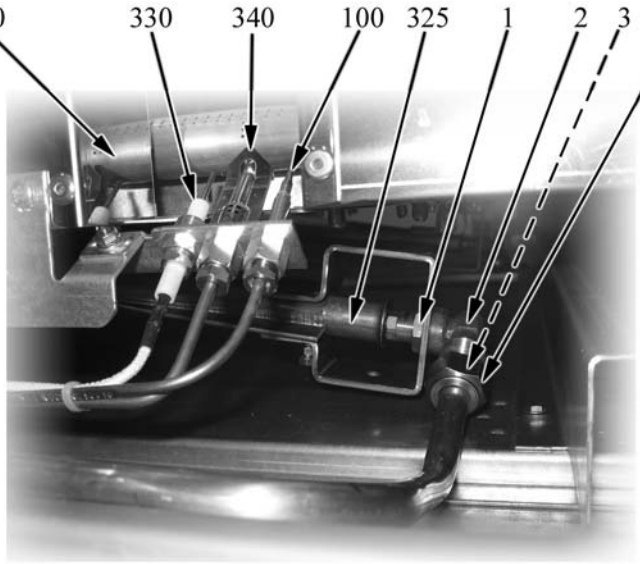
320
330
340
100
325
1
2
3
4

ID	Tipo	Descrizione	Codici
Module:Parti interne, forno elettrico e forno gas			
1		Controdado M15x1	6A010820
2		Raccordo ad angolo	6A014708
3		Bicono d.12	6A016300
4		Dado	6A016200
5	90C,90C1/2R,90CR,90TC,90TC1/2R,90TCR	Termostato sicurezza	826630010
100	90,901/2R,90R,90GG,90GE,90TR	Termocoppia	6A011904
100	90C,90C1/2R,90CR,90TC,90TC1/2R,90TCR	Termocoppia	826920020
320		Bruciatore anteriore destro	2519445
320		Bruciatore posteriore sinistro	2519440
325		Regolatore dell'aria	2510517
330		Candela	6A013302
340		Pilota	6A013220
345		Ugello 27.2	6A013230
345		Ugello 16.2	6A013240
345		Ugello 38R	2510332
345		Ugello 32.2	2510334

90=110/90FTTG, 901/2R=110/90FTTG1/2R, 90R=110/90FTTGR, 90C=110/90FTTGC, 90C1/2R=110/90FTTGC1/2R, 90CR=110/90FTTGCR, 90T=110/90TFTTG, 90T1/2R=110/90TFTTG1/2R, 90TR=110/90TFTTGR, 90TC=110/90TFTTGC, 90TC1/2R=110/90TFTTGC1/2R, 90TCR=110/90TFTTGCR, 90GG=110/90FTTGG, 90GE=110/90FTTGE

A=3/N/PE~400/230V 50Hz, H=3/PE~230V 50Hz, P=1/N/PE~220-240V 50Hz

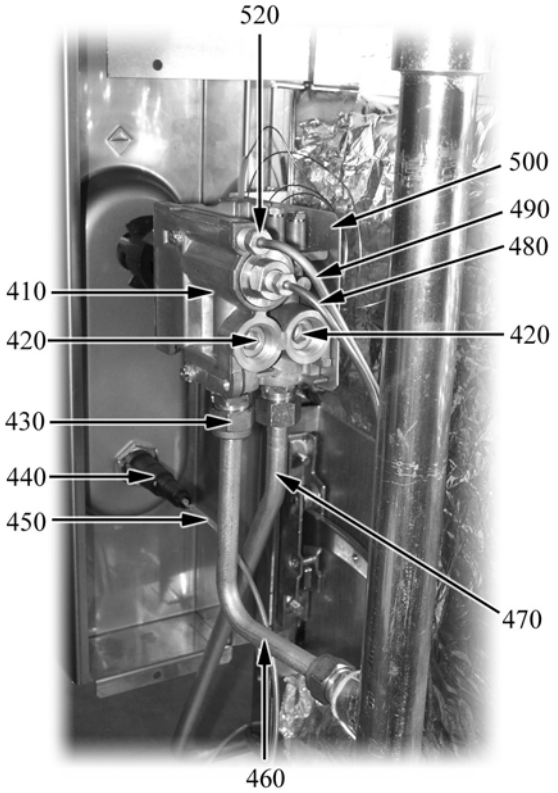
520
500
490
480
410
420
420
430
440
450
470
460

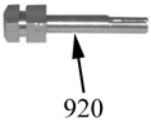
920

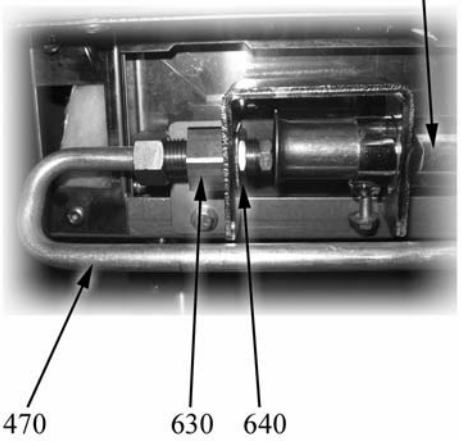
560
470
630
640

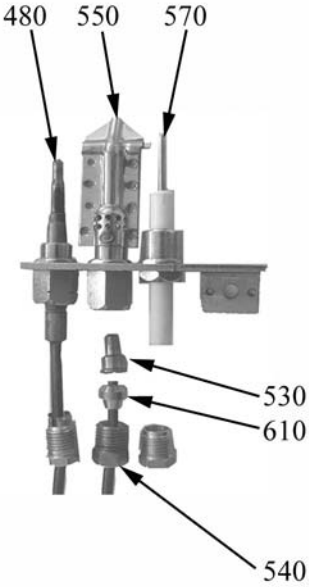
480
550
570
530
610
540

ID	Tipo	Descrizione	Codici
Module: Componenti forno a gas (valvola,bruciatore)			
410	90GG	Valvola	8219950
420	90GG	Tappo	8219951
430	90GG	Raccordo	822450170
440	90GG	Accensione piezoelettrica	6A041105
450	90GG	Cavo d'accensione	2510698
460	90GG	Conduttura	2514615
470	90GG	Conduttura	41823560461
480	90GG	Termocoppia	826920080
490	90GG	Conduttura	2516030
500	90GG	Squadretta	821120710
520	90GG	Raccordo bicono	6A011608
530	90GG	Ugello 16.2	6A013240
530	90GG	Ugello 27.2	6A013230
530	90GG	Ugello 38R	2510332
530	90GG	Ugello 32.2	2510334
540	90GG	Dado	6A017000
550	90GG	Pilota	6A013220
560	90GG	Bruciatore	826390081
570	90GG	Candela	6A013302
610	90GG	Bicono	6A016900
630	90GG	Portaugello	822450440
640	90GG	Dado M15x1	822180010
920	90GG	Attacco manopola	2518650

90=110/90FTTG, 901/2R=110/90FTTG1/2R, 90R=110/90FTTGR, 90C=110/90FTTGC, 90C1/2R=110/90FTTGC1/2R, 90CR=110/90FTTGCR, 90T=110/90TFTTG, 90T1/2R=110/90TFTTG1/2R, 90TR=110/90TFTTGR, 90TC=110/90TFTTGC, 90TC1/2R=110/90TFTTGC1/2R, 90TCR=110/90TFTTGCR, 90GG=110/90FTTGG, 90GE=110/90FTTGE

A=3/N/PE~400/230V 50Hz, H=3/PE~230V 50Hz, P=1/N/PE~220-240V 50Hz

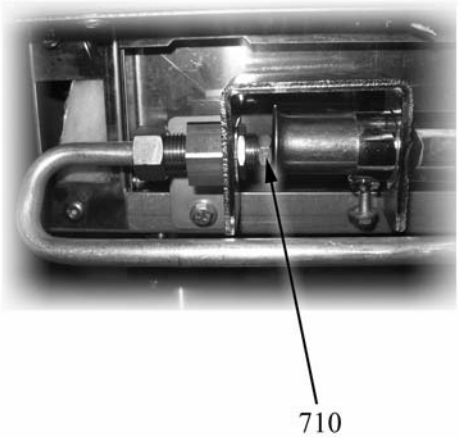
710

ID	Tipo	Descrizione	Codici
Module:	**Ugelli forno gas**		
710	90GG	Kit ugelli IT forno	2591980
-	90GG	Ugello BA 255	
-	90GG	Ugello 270	
-	90GG	Ugello 170	
-	90GG	Ugello 27.2	
-	90GG	Ugello 16.2	
710	90GG	Kit ugelli DE forno	2591981
-	90GG	Ugello BA 255	
-	90GG	Ugello BA 145	
-	90GG	Ugello 295	
-	90GG	Ugello 27.2	
-	90GG	Ugello 16.2	
710	90GG	Kit ugelli H forno	2591982
-	90GG	Ugello 170	
-	90GG	Ugello BA 240	
-	90GG	Ugello BA 285	
-	90GG	Ugello 27.2	
-	90GG	Ugello 16.2	
-	90GG	Ugello 38	
710	90GG	Kit ugelli PL forno	2591983
-	90GG	Ugello BA 155	
-	90GG	Ugello BA 255	
-	90GG	Ugello 310	
-	90GG	Ugello 27.2	
-	90GG	Ugello 16.2	
-	90GG	Ugello 32.2	

90=110/90FTTG, 901/2R=110/90FTTG1/2R, 90R=110/90FTTGR, 90C=110/90FTTGC, 90C1/2R=110/90FTTGC1/2R, 90CR=110/90FTTGCR, 90T=110/90TFTTG, 90T1/2R=110/90TFTTG1/2R, 90TR=110/90TFTTGR, 90TC=110/90TFTTGC, 90TC1/2R=110/90TFTTGC1/2R, 90TCR=110/90TFTTGCR, 90GG=110/90FTTGG, 90GE=110/90FTTGE

A=3/N/PE~400/230V 50Hz, H=3/PE~230V 50Hz, P=1/N/PE~220-240V 50Hz

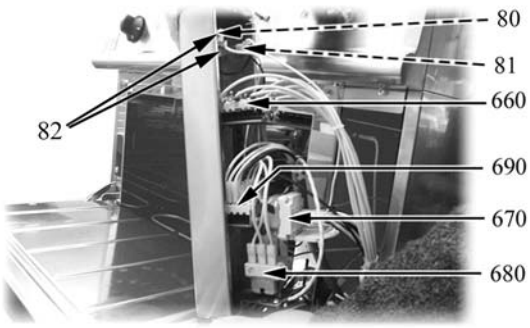
80
81
660
82
690
670
680

740

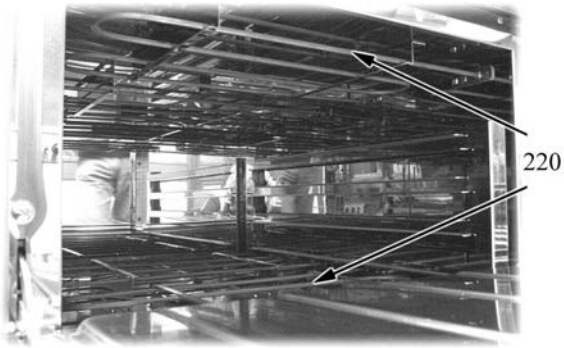
220

ID	Tipo	Descrizione	Codici
Module: Componenti forno elettrico			
80	90GE	Gemma verde	6A038507
81	90GE	Gemma bianca	6A039207
82	90GE	Segnalatori luminosi	6A038506
220	90GE	Resistenza 1500 W	826620041
660	90GE	Commutatore	6A046750
670	90GE	Termostato	6A044601
680	90GE	Termostato sicurezza	826630130
690	90GE	Commutatore	6A046001
740	90GE	Contattore	6A047031

90=110/90FTTG, 901/2R=110/90FTTG1/2R, 90R=110/90FTTGR, 90C=110/90FTTGC, 90C1/2R=110/90FTTGC1/2R, 90CR=110/90FTTGCR, 90T=110/90TFTTG, 90T1/2R=110/90TFTTG1/2R, 90TR=110/90TFTTGR, 90TC=110/90TFTTGC, 90TC1/2R=110/90TFTTGC1/2R, 90TCR=110/90TFTTGCR, 90GG=110/90FTTGG, 90GE=110/90FTTGE

A=3/N/PE~400/230V 50Hz, H=3/PE~230V 50Hz, P=1/N/PE~220-240V 50Hz

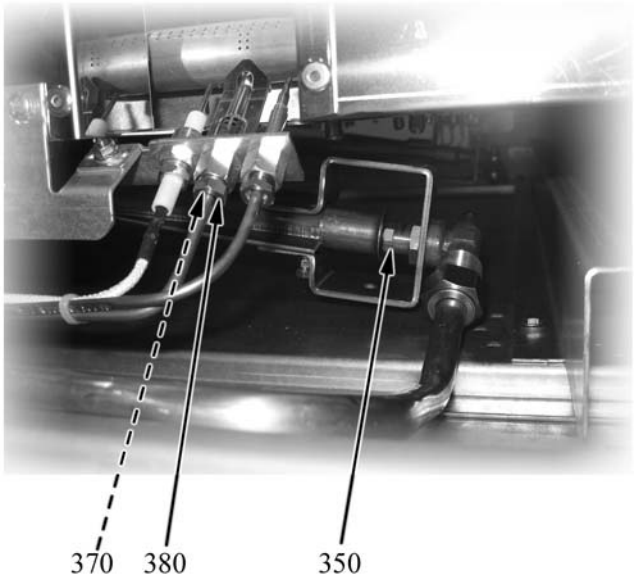
370
380
350

ID	Tipo	Descrizione	Codici
Module:	**Ugelli fry top**		
350		Kit ugelli IT	2591870
-		Ugello L 140	
-		Ugello L 220	
-		Ugello L 225	
-		Ugello 16.2	
-		Ugello 27.2	
350		Kit ugelli DE	2591871
-		Ugello L 125	
-		Ugello L 220	
-		Ugello L 245	
-		Ugello 16.2	
-		Ugello 27.2	
350		Kit ugelli H	2591872
-		Ugello L 140	
-		Ugello L 200	
-		Ugello L 235	
-		Ugello 16.2	
-		Ugello 38R	
350		Kit ugelli PL	2591873
-		Ugello L 135	
-		Ugello L 220	
-		Ugello L 250	
-		Ugello L 325	
-		Ugello 27.2	
-		Ugello 16.2	
-		Ugello 32.2	
370		Bicono	6A016900
380		Raccordo	6A017000

90=110/90FTTG, 901/2R=110/90FTTG1/2R, 90R=110/90FTTGR, 90C=110/90FTTGC, 90C1/2R=110/90FTTGC1/2R, 90CR=110/90FTTGCR, 90T=110/90TFTTG, 90T1/2R=110/90TFTTG1/2R, 90TR=110/90TFTTGR, 90TC=110/90TFTTGC, 90TC1/2R=110/90TFTTGC1/2R, 90TCR=110/90TFTTGCR, 90GG=110/90FTTGG, 90GE=110/90FTTGE

A=3/N/PE~400/230V 50Hz, H=3/PE~230V 50Hz, P=1/N/PE~220-240V 50Hz

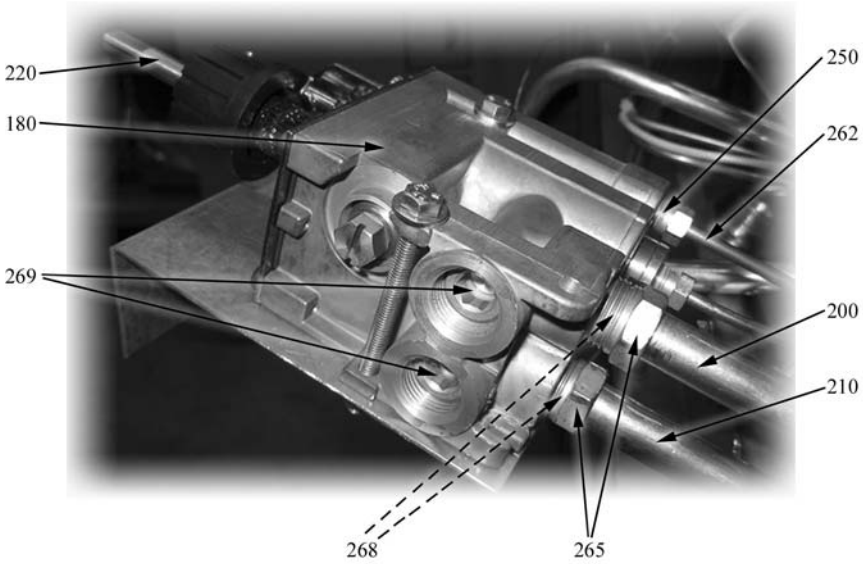
220
180
269
250
262
200
210
268
265

ID	Tipo	Descrizione	Codici
Module:Valvola anteriore FRY TOP			
180		Valvola	8219950
200		Conduttura anteriore alimentazione d. 12	2516065
210		Conduttura anteriore valvola-bruciatore d.12	2516063
220		Attacco manopola	2518660
250		Raccordo bicono d. 4	6A011608
262		Conduttura anteriore pilota	2516067
265		Raccordo d.12	6A011620
268		Bicono d. 12	6A011625
269		Tappo	8219951

90=110/90FTTG, 901/2R=110/90FTTG1/2R, 90R=110/90FTTGR, 90C=110/90FTTGC, 90C1/2R=110/90FTTGC1/2R, 90CR=110/90FTTGCR, 90T=110/90TFTTG, 90T1/2R=110/90TFTTG1/2R, 90TR=110/90TFTTGR, 90TC=110/90TFTTGC, 90TC1/2R=110/90TFTTGC1/2R, 90TCR=110/90TFTTGCR, 90GG=110/90FTTGG, 90GE=110/90FTTGE

A=3/N/PE~400/230V 50Hz, H=3/PE~230V 50Hz, P=1/N/PE~220-240V 50Hz

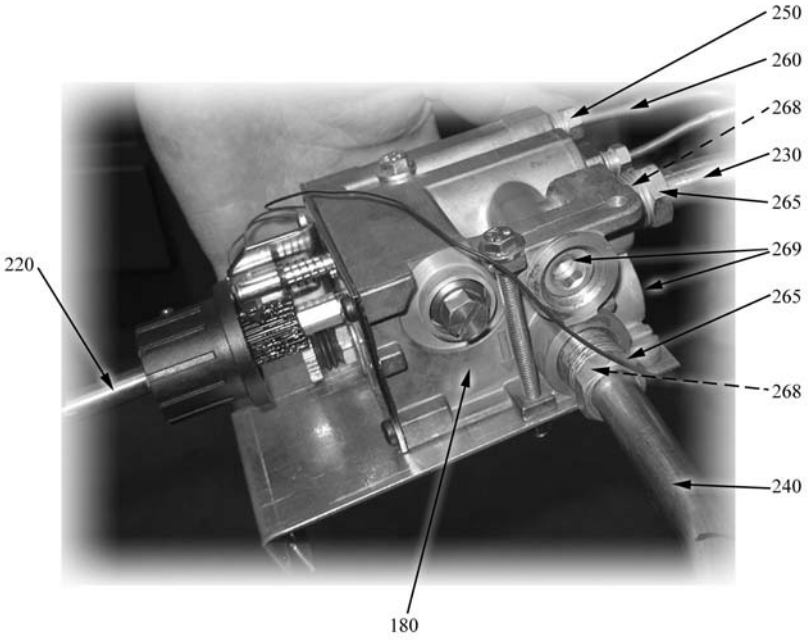
250
260
268
230
265
269
265
268
240
220
180

ID	Tipo	Descrizione	Codici
Module:Valvola posteriore FRY TOP			
180		Valvola	8219950
220		Attacco manopola	2518660
230		Conduttura posteriore alimentazione d. 12	2516066
240		Conduttura posteriore valvola-bruciatore d.12	2516064
250		Raccordo bicono d. 4	6A011608
260		Conduttura posteriore pilota	2516068
265		Raccordo d.12	6A011620
268		Bicono d. 12	6A011625
269		Tappo	8219951

90=110/90FTTG, 901/2R=110/90FTTG1/2R, 90R=110/90FTTGR, 90C=110/90FTTGC, 90C1/2R=110/90FTTGC1/2R, 90CR=110/90FTTGCR, 90T=110/90TFTTG, 90T1/2R=110/90TFTTG1/2R, 90TR=110/90TFTTGR, 90TC=110/90TFTTGC, 90TC1/2R=110/90TFTTGC1/2R, 90TCR=110/90TFTTGCR, 90GG=110/90FTTGG, 90GE=110/90FTTGE

A=3/N/PE~400/230V 50Hz, H=3/PE~230V 50Hz, P=1/N/PE~220-240V 50Hz