FRY-TOP A GAS
Serie 700

TIPO: 72/02FTG VAL, 72/02FTGR VAL, 72/02FTGC VAL, 74/02FTG VAL, 74/02FTG1/2R VAL, 74/02FTGR VAL, 74/02FTGC VAL, 72/02TFTG VAL, 72/02TFTGR VAL, 72/02TFTGC VAL, 74/02TFTG VAL, 74/02TFTG1/2R VAL, 74/02TFTGR VAL, 74/02TFTGC VAL, 72/02FTG, 72/02FTGR, 74/02FTG, 74/02FTG1/2R, 74/02FTGR, 72/02TFTG, 72/02TFTGR, 74/02TFTG, 74/02TFTG1/2R, 74/02TFTGR

Parti di ricambio

S/N: Valido da:20. 12. 2005 Rev.: 2.1

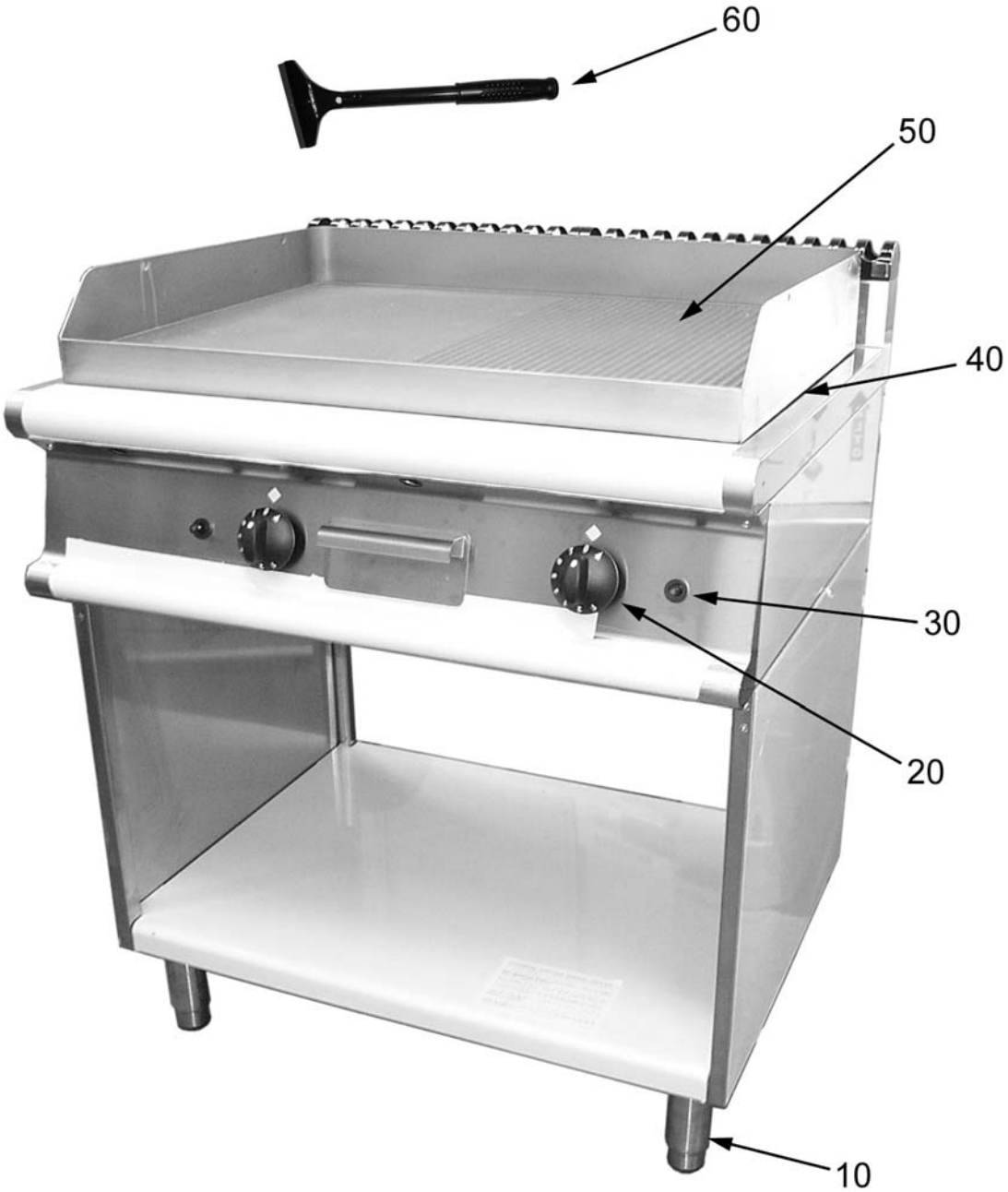
60
50
40
30
20
10

ID	Modello	Tipo	Descrizione	Codici del produttore
Module:Parti esterne				
10	G		Piedino	2519500
20	G		Manopola nera	2599202
20	G		Manopola grigia	2599252
30	G		Accensione piezoelettrica	6A041105
40	G	72V	Cordone isolamento	6A098400
40	G	74V	Cordone isolamento	6A098400
50	G	72V,72	Piastra con alzatina	2519700
50	G	72VR,72R	Piastra con alzatina	2519710
50	G	72VC	Piastra con alzatina	2519720
50	G	74V,74	Piastra con alzatina	2519750
50	G	74VR,74R	Piastra con alzatina	2519760
50	G	74V1-2R,741-2R	Piastra con alzatina	2519770
60	G	72VC	Raschietto	2510513

G=GAS

72V=72/02FTG VAL, 72VR=72/02FTGR VAL, 72VC=72/02FTGC VAL, 74V=74/02FTG VAL, 74V1-2R= 74/02FTG1/2R VAL, 74VR=74/02FTGR VAL, 74VC=74/02FTGC VAL, 72TV=72/02TFTG VAL, 72TVR= 72/02TFTGR VAL, 72TVC=72/02TFTGC VAL, 74TV=74/02TFTG VAL, 74TV1-2R=74/02TFTG1/2R VAL, 74TVR= 74/02TFTGR VAL, 74TVC=74/02TFTGC VAL, 72=72/02FTG, 72R=72/02FTGR, 74=74/02FTG, 741-2R=74/02FTG1/2R, 74R=74/02FTGR, 72T=72/02TFTG, 72TR=72/02TFTGR, 74T=74/02TFTG, 74T1-2R=74/02TFTG1/2R, 74TR=74/02TFTGR

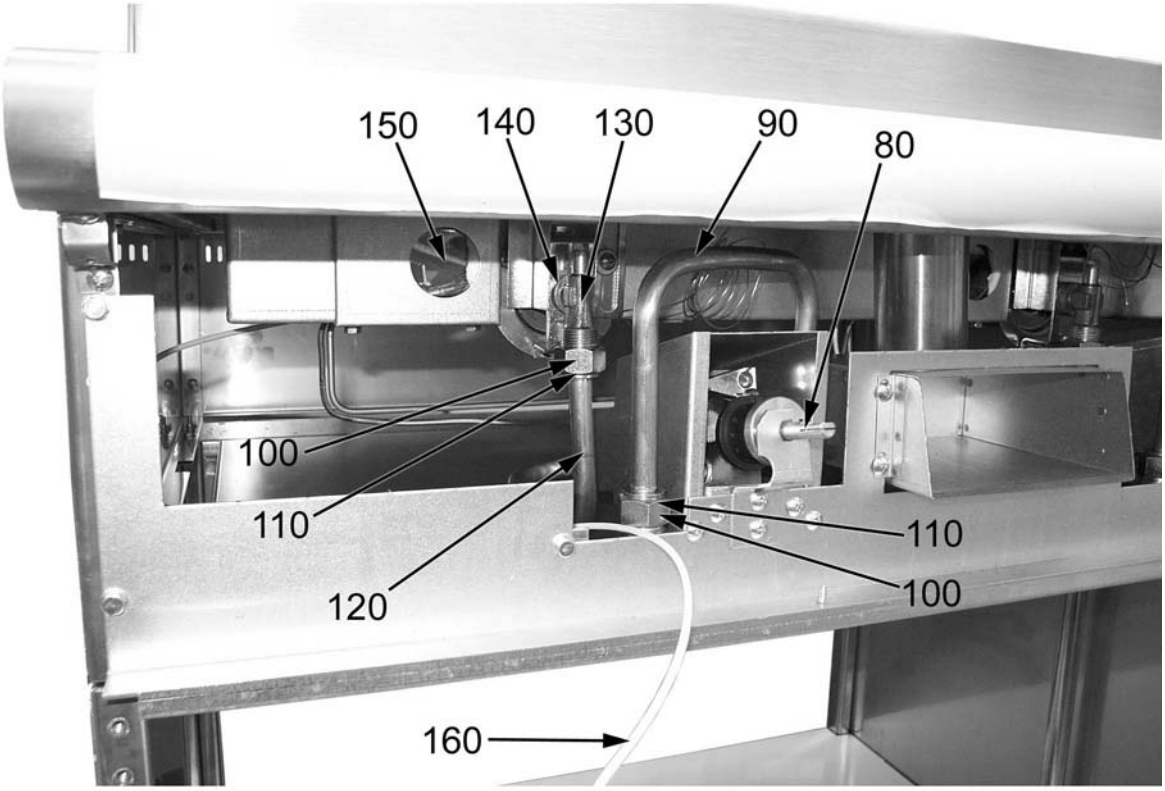
150
140
130
90
80
100
110
120
110
100
160

ID	Modello	Tipo	Descrizione	Codici del produttore
Module:Parti gas 1				
80	G		Prolunga manopola valvola	2519520
90	G		Conduttura	2514551
100	G		Dado di fissaggio del bicono	6A016200
110	G		Bicono	6A016300
120	G		Conduttura	2514550
130	G		Raccordo	6A014708
140	G		Kit ugelli IT bruciatore (valido per un bruciatore)	2591661
	G		Ugello L 130	
	G		Ugello L 195	
	G		Ugello L 203	
140	G		Kit ugelli DE bruciatore (valido per un bruciatore)	2591662
	G		Ugello L 115	
	G		Ugello L 195	
	G		Ugello L 203	
	G		Ugello L 220	
140	G		Kit ugelli H bruciatore (valido per un bruciatore)	2591663
	G		Ugello L 130	
	G		Ugello L 185	
	G		Ugello L 203	
140	G		Kit ugelli gas citta bruciatore (valido per un bruciatore)	2591852
	G		Ugello L 130	
	G		Ugello L 195	
	G		Ugello L 203	
	G		Ugello L 420	
	G		Ugello L 370	
	G		Ugello 45·2	
150	G		Vetro spiocino	2519436
160	G		Cavo d'accensione	2510698

G=GAS

72V=72/02FTG VAL, 72VR=72/02FTGR VAL, 72VC=72/02FTGC VAL, 74V=74/02FTG VAL, 74V1-2R= 74/02FTG1/2R VAL, 74VR=74/02FTGR VAL, 74VC=74/02FTGC VAL, 72TV=72/02TFTG VAL, 72TVR= 72/02TFTGR VAL, 72TVC=72/02TFTGC VAL, 74TV=74/02TFTG VAL, 74TV1-2R=74/02TFTG1/2R VAL, 74TVR= 74/02TFTGR VAL, 74TVC=74/02TFTGC VAL, 72=72/02FTG, 72R=72/02FTGR, 74=74/02FTG, 741-2R=74/02FTG1/2R, 74R=74/02FTGR, 72T=72/02TFTG, 72TR=72/02TFTGR, 74T=74/02TFTG, 74T1-2R=74/02TFTG1/2R, 74TR=74/02TFTGR

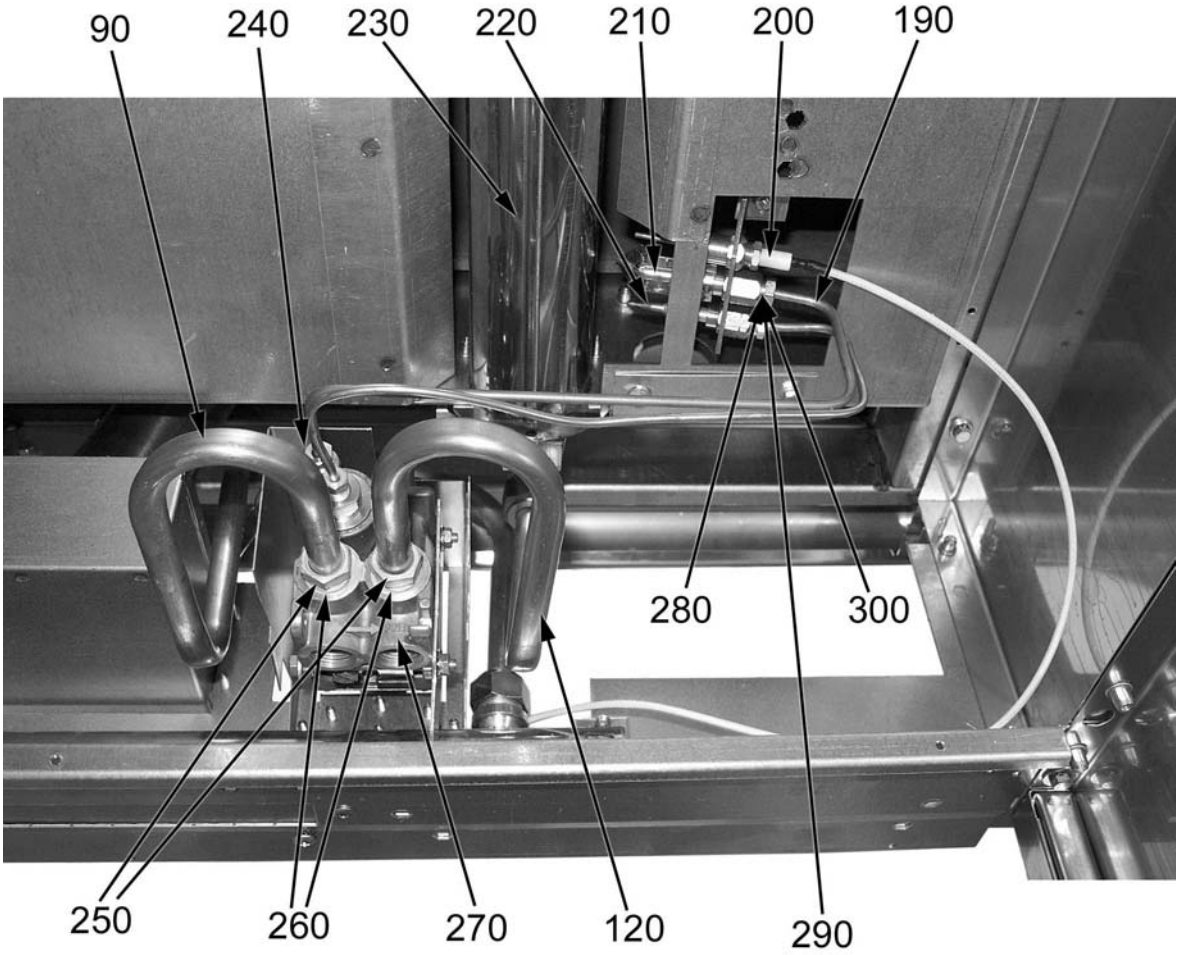
90
240
230
220
210
200
190
280
300
250
260
270
120
290

ID	Modello	Tipo	Descrizione	Codici del produttore
Module:Parti gas 2				
190	G		Conduttura	2514552
200	G		Candela di accensione	6A013302
210	G		Pilota	6A013220
220	G		Termocoppia	6A011912
230	G		Bruciatore	2510695
240	G		Raccordo bicono	6A011608
90	G		Conduttura	2514551
250	G		Raccordo	6A011620
260	G		Bicono	6A011625
270	G		Valvola	8219950
120	G		Conduttura	2514550
280	G		Dado	6A017000
290	G		Ugello 27·2	6A013230
290	G		Ugello 38·1	2510332
290	G		Ugello 16·2	6A013240
290	G		Ugello 45·2	2510716
300	G		Bicono	6A016900

G=GAS

72V=72/02FTG VAL, 72VR=72/02FTGR VAL, 72VC=72/02FTGC VAL, 74V=74/02FTG VAL, 74V1-2R= 74/02FTG1/2R VAL, 74VR=74/02FTGR VAL, 74VC=74/02FTGC VAL, 72TV=72/02TFTG VAL, 72TVR= 72/02TFTGR VAL, 72TVC=72/02TFTGC VAL, 74TV=74/02TFTG VAL, 74TV1-2R=74/02TFTG1/2R VAL, 74TVR= 74/02TFTGR VAL, 74TVC=74/02TFTGC VAL, 72=72/02FTG, 72R=72/02FTGR, 74=74/02FTG, 741-2R=74/02FTG1/2R, 74R=74/02FTGR, 72T=72/02TFTG, 72TR=72/02TFTGR, 74T=74/02TFTG, 74T1-2R=74/02TFTG1/2R, 74TR=74/02TFTGR

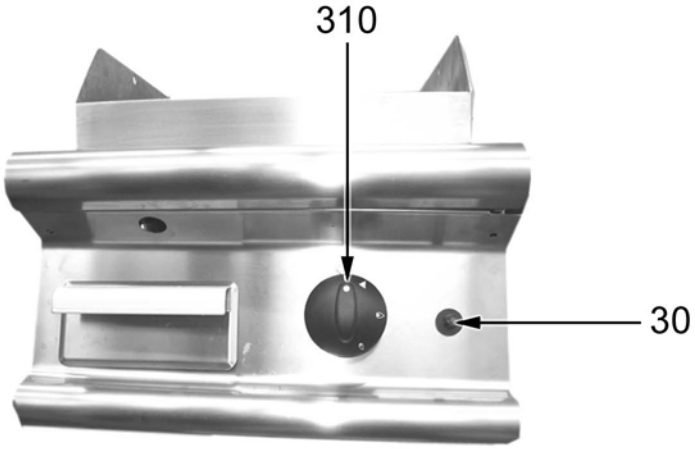
310
30

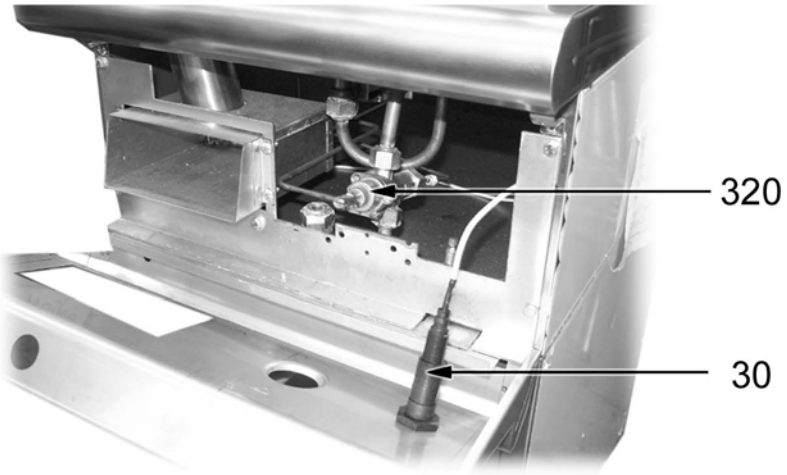
320
30

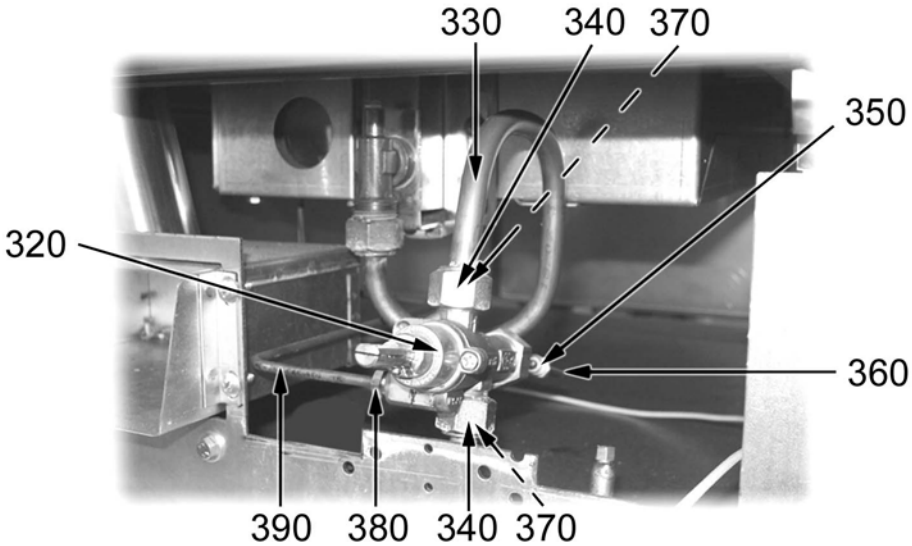
330
340
370
350
320
360
390
380
340
370

ID	Modello	Tipo	Descrizione	Codici del produttore
Module:Rubinetto				
310	G	72,72R,74,74R,741-2R, 72T,72TR,74T,74TR,74T1-2R	Manopola cucina gas nera	2599200
320	G	72,72R,74,74R,741-2R, 72T,72TR,74T,74TR,74T1-2R	Rubinetto	6A011490
330	G	72,72R,74,74R,741-2R, 72T,72TR,74T,74TR,74T1-2R	Conduttura	2514568
340	G	72,72R,74,74R,741-2R, 72T,72TR,74T,74TR,74T1-2R	Dado	6A011485
350	G	72,72R,74,74R,741-2R, 72T,72TR,74T,74TR,74T1-2R	Raccordo	6A013401
360	G	72,72R,74,74R,741-2R, 72T,72TR,74T,74TR,74T1-2R	Termocoppia	6A011912
370	G	72,72R,74,74R,741-2R, 72T,72TR,74T,74TR,74T1-2R	Bicono	6A011480
380	G	72,72R,74,74R,741-2R, 72T,72TR,74T,74TR,74T1-2R	Dado	6A016110
390	G	72,72R,74,74R,741-2R, 72T,72TR,74T,74TR,74T1-2R	Conduttura	2514569
30	G	72,72R,74,74R,741-2R, 72T,72TR,74T,74TR,74T1-2R	Accensione piezoelettrica	6A041105

G=GAS

72V=72/02FTG VAL, 72VR=72/02FTGR VAL, 72VC=72/02FTGC VAL, 74V=74/02FTG VAL, 74V1-2R= 74/02FTG1/2R VAL, 74VR=74/02FTGR VAL, 74VC=74/02FTGC VAL, 72TV=72/02TFTG VAL, 72TVR= 72/02TFTGR VAL, 72TVC=72/02TFTGC VAL, 74TV=74/02TFTG VAL, 74TV1-2R=74/02TFTG1/2R VAL, 74TVR= 74/02TFTGR VAL, 74TVC=74/02TFTGC VAL, 72=72/02FTG, 72R=72/02FTGR, 74=74/02FTG, 741-2R=74/02FTG1/2R, 74R=74/02FTGR, 72T=72/02TFTG, 72TR=72/02TFTGR, 74T=74/02TFTG, 74T1-2R=74/02TFTG1/2R, 74TR=74/02TFTGR